CRASH PROTECTION
SERIES CSR

▶ PRODUCT ADVANTAGES

▶ **Adjustable triggering sensitivity**

By controlling the air pressure, you can optimally match the sensitivity to your application.

▶ **Integrated sensors**

If there is a collision, the integrated sensor gives a signal to the control system to trigger an emergency stop.

▶ **Manual reset**

To ensure that the machine and the reason for the emergency stop are examined, the manual reset is suitable.

▶ THE BEST PRODUCT FOR YOUR APPLICATION

▶ **Our products welcome the challenge!**
Extreme conditions, all over the world—our tried and tested components and systems give you endless possibilities.
Find the best product for your specific use:
www.zimmer-group.com

▶ BENEFITS IN DETAIL

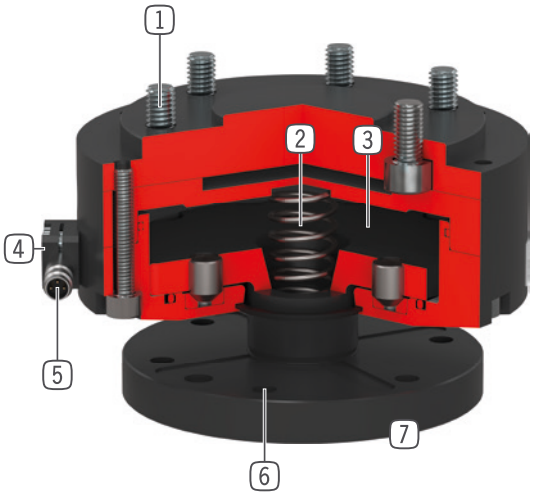

1 **Robot connecting flange**
- partial mounting circle in accordance with EN ISO 9409-1

2 **Drive**
- single-acting pneumatic cylinder
- response sensitivity adjustable via operating pressure
- with integrated spring

3 **Force transfer**
- direct and low-loss at piston surface

4 **Pressure differential switch**
- indirect overload recognition

5 **Sensors**
- inductive proximity switch generates a signal which can be used to recognise an overload situation
- generates an automatic emergency off system situation
- included in the delivery inductive proximity switch Ø 8 mm with cable connection M8x1

6 **Connecting flange**

7 **Overload recognition and compensation**
- in Z-direction up to 28 mm stroke
- angular defection up to 12.5°
- on rotation around the Z-axis 360°

▶ TECHNICAL DATA

Installation size	Connecting flange according EN ISO 9409-1	Z-axis deviation [mm]	Horizontal deviation +/- [°]
CSR50	TK 50	12.5	12.5
CSR63	TK 63	10.5	12.5
CSR80	TK 80	14	9
CSR100	TK 100	18	9
CSR125	TK 125	23	9
CSR160	TK 160	28	9

▶ FURTHER INFORMATION IS AVAILABLE ONLINE

All information just a click away at: www.zimmer-group.com. Find data, illustrations, 3D models and operating instructions for your installation size using the order number for your desired product. Quick, clear and always up-to-date.

CRASH PROTECTION
INSTALLATION SIZE CSR100

▶ PRODUCT SPECIFICATIONS

▶ Air pressurization

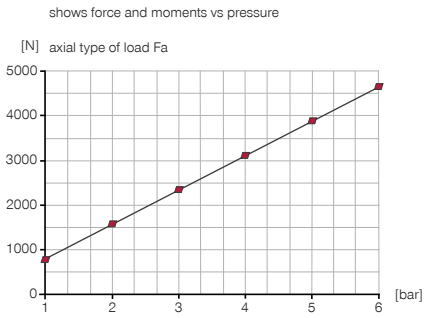

▶ Forces and moments

See diagram for max. forces and torques

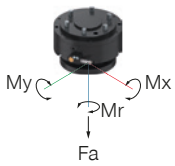

▶ Air pressurization

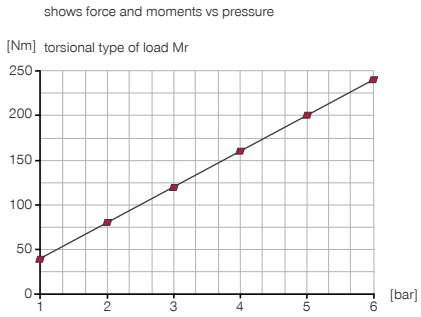

▶ Air pressurization

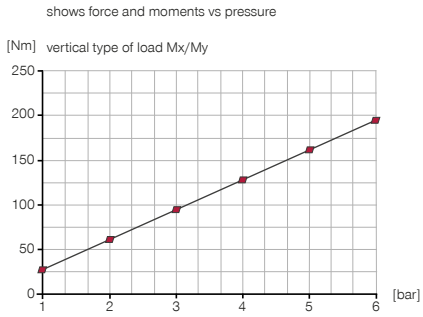

▶ INCLUDED IN DELIVERY

1 [piece]
Inductive proximity switch – M8
NJ8-E2S-05

6 [piece]
Cylinder Screw
C0912080209

▶ RECOMMENDED ACCESSORIES

ENERGY SUPPLY

GV1-8X8
Straight Fittings - Quick Connect Style

WV1-8X8
Angled Fittings - Quick Connect Style

CONNECTIONS / OTHER

KAG500
Plug-in connector Straight Cable 5m - female connector M8

KAW500
Plug-in connector Angled Cable 5m - female connector M8

	► Technical data
Order no.	**CSR100**
Connecting flange according EN ISO 9409-1	TK 100
Installation Height [mm]	97.5
Z-axis deviation [mm]	18
Repetition accuracy axial +/- [mm]	0.05
Horizontal deviation +/- [°]	9
Repetition accuracy radial +/- [mm]	0.05
Operating pressure [bar]	1 ... 6
Nominal operating pressure [bar]	6
Operating temperature [°C]	5 ... +80
Certifications	LABS / REACH / RoHS
Weight [kg]	3.2

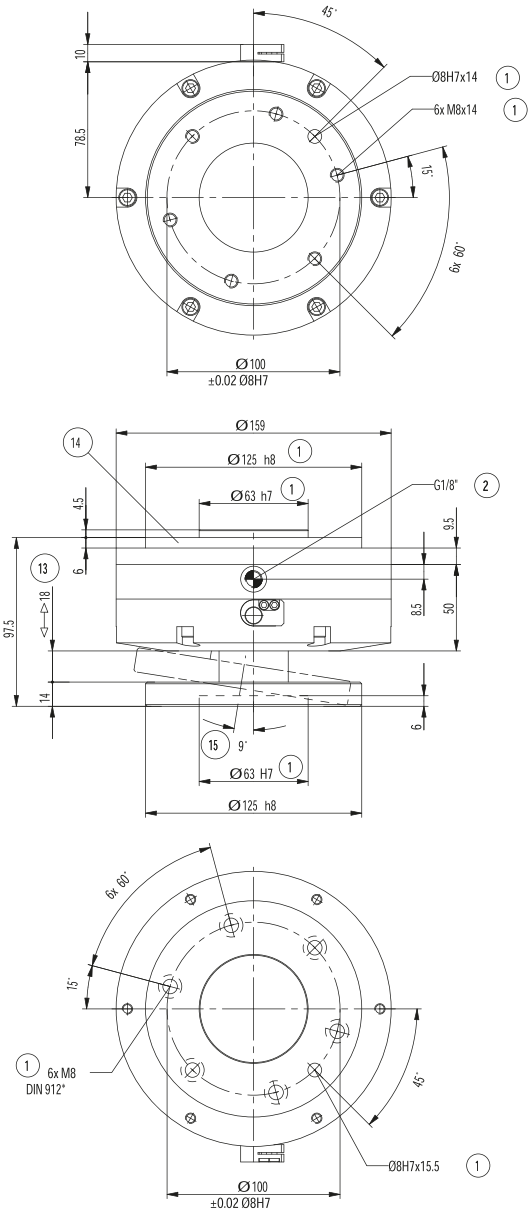

1 Fixing CSR
2 Energy supply
13 Stroke Z
14 Adapter plate
15 Deviation maximal