ADJUSTMENT JAWS
INSTALLATION SIZE EB5025

▶ PRODUCT SPECIFICATIONS

▶ Gripping force diagram

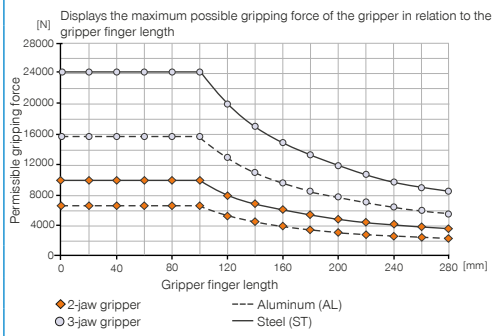

▶ Technical data

Order no.	EB5025AL	EB5025ST
Compatible with installation size	GPP5025 / GPD5025	GPP5025 / GPD5025
Max. adjustment range [mm]	90	100
Spacing [mm]	9x10	10x10
Certifications	LABS / REACH / RoHS	LABS / REACH / RoHS
Weight per adjustment jaw [kg]	0.81	1.95

1 Fastening the adjustment jaw
3 Fixing for gripper finger
5 Adjustment mechanism (removable)

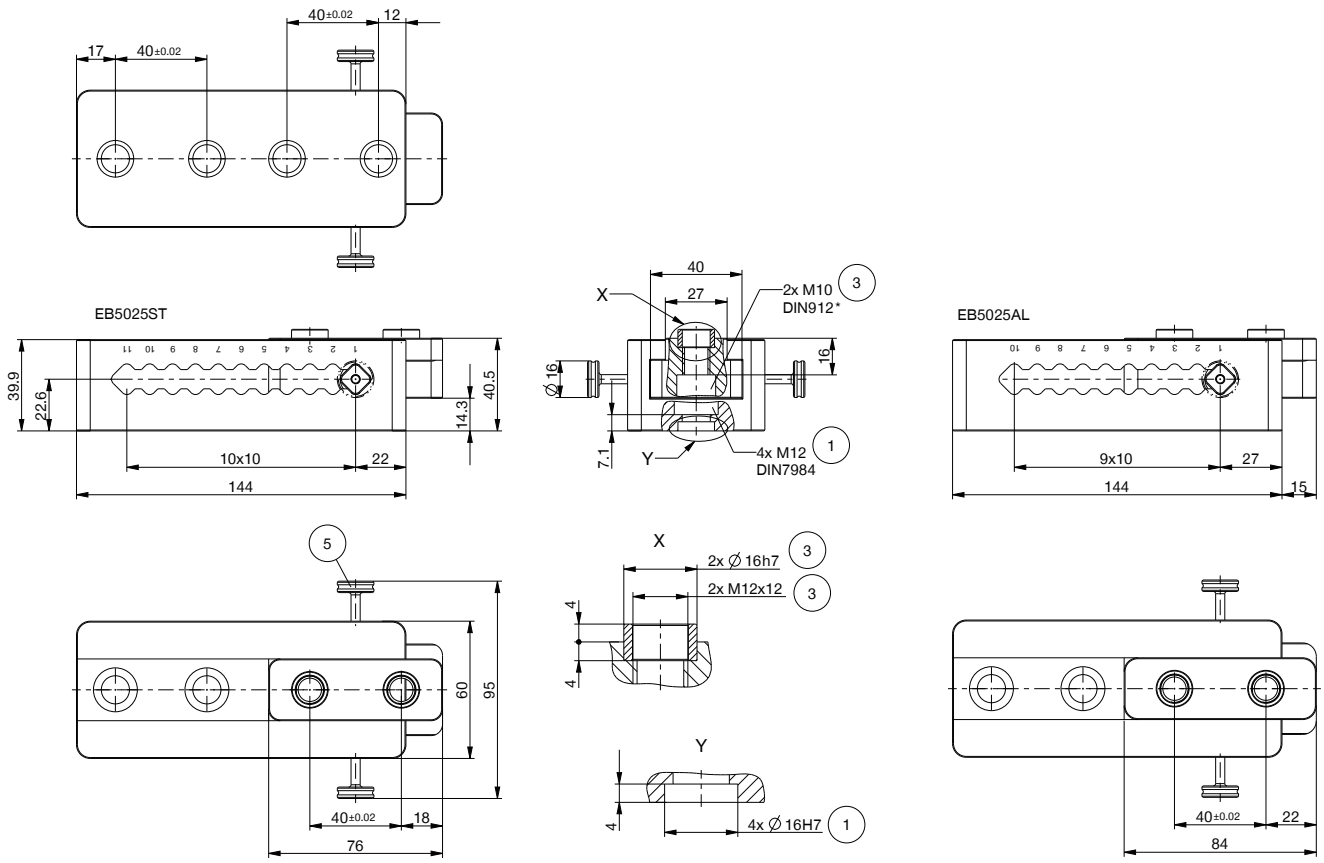

ADJUSTMENT JAWS
SERIES EB5000

▶ PRODUCT ADVANTAGES

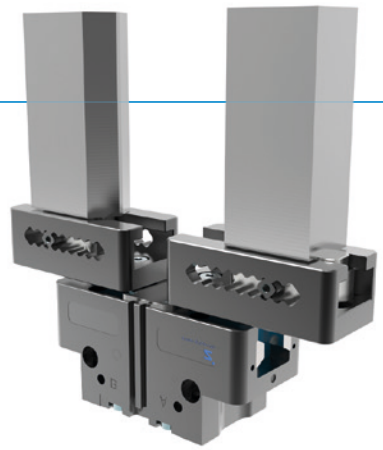

- **Easy and fast**

  Easy gripper finger adjustment to fit various workpieces saves time and money

- **Reproducible and durable**

  The numbering of the detent notches allows you to easily configure the gripper finger length and FEM-calculated adjustment jaws guarantee maximum process reliability

- **You can install one and the same adjustment jaw within the same 5000 gripper range on various gripper types of identical size and combine it with the respective accessory parts. The increases flexibility and reduces the diversity of parts in equal measure, which in turn reduces the storage costs**

▶ THE BEST PRODUCT FOR YOUR APPLICATION

- **Our products welcome the challenge!**
  Extreme conditions, all over the world—our tried and tested components and systems give you endless possibilities.
  Find the best product for your specific use:
  www.zimmer-group.com

▶ SETTING THE GRIPPER FINGER POSITION IN UNDER 10 SECONDS

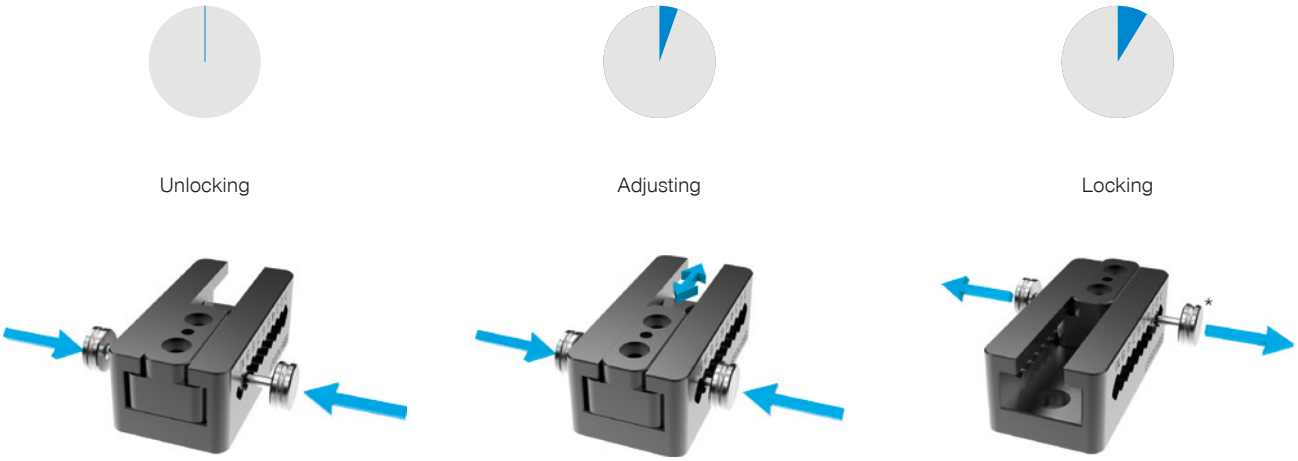

* Pressure pieces are screwed on and can be removed to minimize interference contours

▶ FURTHER INFORMATION IS AVAILABLE ONLINE

All information just a click away at: www.zimmer-group.com. Find data, illustrations, 3D models and operating instructions for your installation size using the order number for your desired product. Quick, clear and always up-to-date.