2-JAW PARALLEL GRIPPERS WITH LONG STROKE
SERIES GEH8000

▶ PRODUCT ADVANTAGES

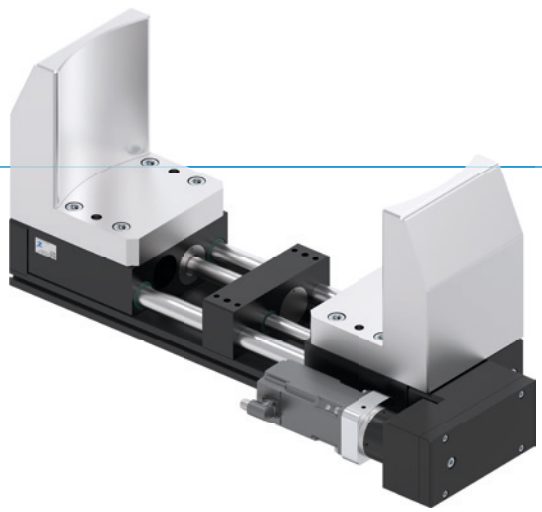

"The powerful"

▶ **Extremely long and heavy gripper fingers possible**

Despite the flat design, there are virtually no limits to the design of the gripper jaws when loading large workpieces such as engine blocks or wheel rims onto the machine.

▶ **Decide for yourself!**

Whether standard motors or motors from other manufacturers - you decide what harmonizes best with your system.

▶ **Dirt-protected and safe**

Thanks to its IP54 rating, you can use the gripper even in harsh environmental conditions, and the redundant position hold feature in the event of a power failure ensures maximum process reliability.

▶ SERIES CHARACTERISTICS

Installation size	Version			
GEH8XXXX	M0-03-A	M0-63-A	M1-03-A	M1-63-A
unpowered; installation provided by customer	●	●		
Drive with brake			●	●
Position retention via safety clamp		●		●
Profinet			●	●
Gripping force adjustable			●	●
Integrated sensing			●	●
Positionable			●	●
5 million maintenance-free cycles (max.)	●	●	●	●
IP54	●	●	●	●

▶ BENEFITS IN DETAIL

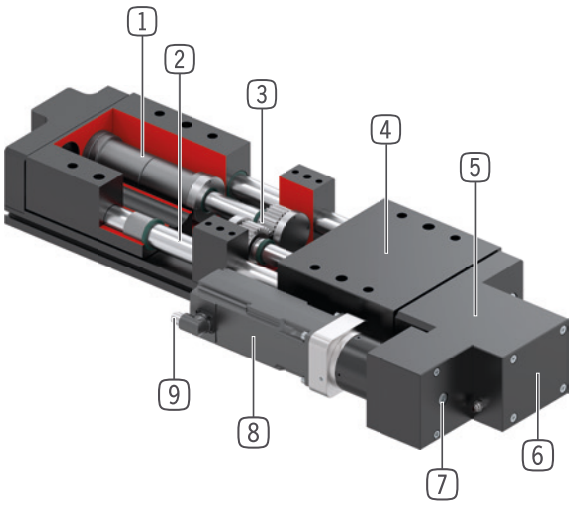

1 **Trapezoidal threaded shaft**
- Service life (lubricated)

2 **Roller slide**
- Sealed round guide designed for harsh environmental conditions and equipped with maintenance-free plain bearing bushings

3 **Synchronization**
- Enclosed and dust-proof; asynchronous on request

4 **Gripper jaw**
- individual gripper finger mounting

5 **Gearbox**
- Durable force transmission via gears

6 **Safety clamp**
- Permanent magnet brake for position locking
- Redundancy for the holding brake in version -63

7 **Emergency release**
- Using an Allen key

8 **Drive**
- M1 with a Siemens servo motor and M0 without a motor

9 **Energy supply**
- Single-cable solution for power and data transmission

▶ TECHNICAL DATA

Installation size	Stroke per jaw	Nominal gripping force	IP class	Weight
GEH83063	62.5 mm	2200 N	IP54	23 kg - 27 kg
GEH83100	100 mm	2200 N	IP54	24 kg - 28 kg
GEH83125	125 mm	2200 N	IP54	29 kg - 32 kg
GEH83150	150 mm	2200 N	IP54	29 kg - 33 kg

▶ FURTHER INFORMATION IS AVAILABLE ONLINE

All information just a click away at: www.zimmer-group.com. Find data, illustrations, 3D models and operating instructions for your installation size using the order number for your desired product. Quick, clear and always up-to-date.

2-JAW PARALLEL GRIPPERS WITH LONG STROKE
INSTALLATION SIZE GEH83063

▶ PRODUCT SPECIFICATIONS

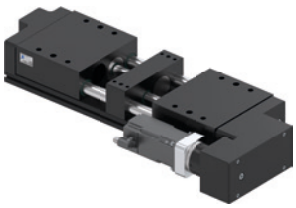

▶ Gripping force diagram

Shows the arithmetic total of the individual forces that occur on the gripper fingers, depending on the gripper finger length and the set gripping force

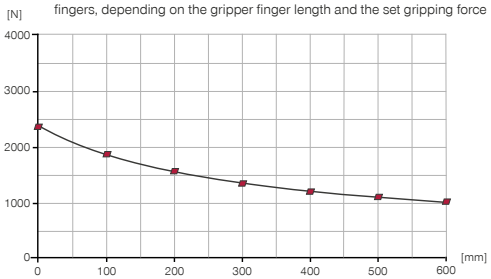

▶ Forces and moments

Displays static forces and moments that can also have an effect, besides the gripping force.

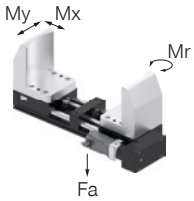

Mr [Nm]	1020
Mx [Nm]	1010
My [Nm]	1020
Fa [N]	18000

▶ INCLUDED IN DELIVERY

2 [piece]
Centering Disc
059600

▶ RECOMMENDED ACCESSORIES

CONNECTIONS / OTHER

CREG00188
PROFINET drive control system

CSTE01530
Motor connection cable, 3 m

CSTE01531
Motor connection cable, 5 m

CSTE01532
Motor connection cable, 10 m

CONNECTIONS / OTHER

CSTE01924
Motor connection cable, 15 m

ZUB234213
Bosch MS2N03 adapter plate

ZUB230951
Beckhoff AM8022 adapter plate

	► Technical data			
Order no.	**GEH83063M0-03-A**	**GEH83063M0-63-A**	**GEH83063M1-03-A**	**GEH83063M1-63-A**
Control			Profinet	Profinet
Motor type included in the scope of delivery	Customer-specific	Customer-specific	1FK2203-4AG10-0MA0	1FK2203-4AG10-0MA0
Stroke per jaw, adjustable [mm]	62.5	62.5	62.5	62.5
Nominal gripping force [N]			2200	2200
Motor holding brake			Yes	Yes
Safety clamp		Yes		Yes
Minimum gripping force [%]	80	80	80	80
Maximum gripping speed per gripper jaw [mm/s]	10	10	10	10
Maximum positioning speed per gripper jaw [mm/s]	80	80	80	80
Minimum positioning path per jaw [mm]	1	1	1	1
Dead weight of mounted gripper finger max. [kg]	35	35	35	35
Length of the gripper fingers max. [mm]	600	600	600	600
Repetition accuracy +/- [mm]	0.05	0.05	0.05	0.05
Operating temperature [°C]	5 ... +60	5 ... +60	5 ... +60	5 ... +60
Certifications	LABS / REACH / RoHS	LABS / REACH / RoHS	LABS / REACH / RoHS	LABS / REACH / RoHS
Protection to IEC 60529	IP54	IP54	IP54	IP54
Weight [kg]	23	24	26	27

GEH83063M0-03-A

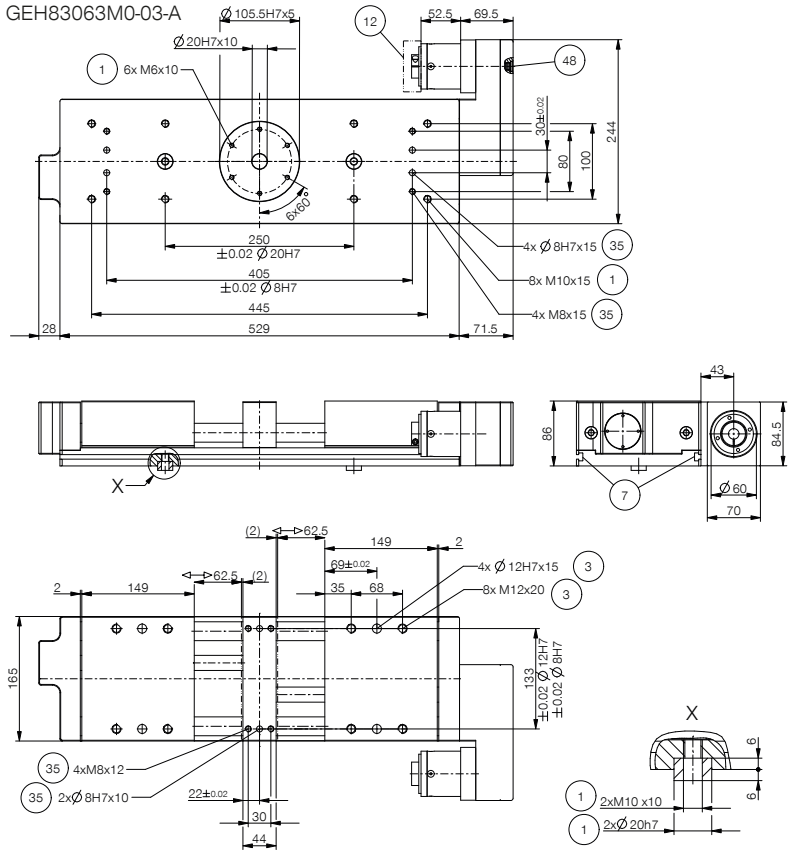

1 Gripper attachment
3 Fixing for gripper finger
7 Fixing for mounting block
12 Motor adapter plate
35 Mounting posibillity for stroke adjustment screwe
48 Emergency release
56 Other/auxiliary energy supply

GEH83063M0-63-A

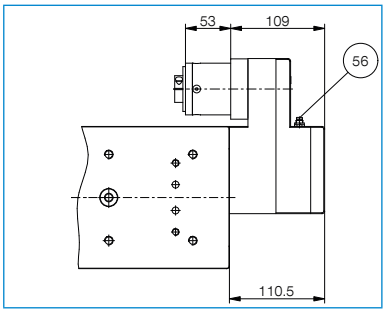

GEH83063M1-03-A

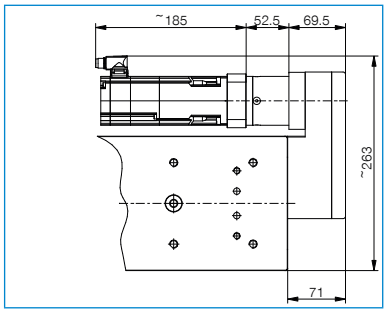
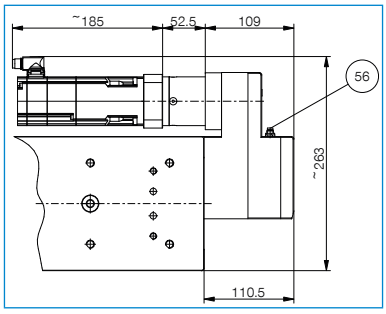
GEH83063M1-63-A