2-JAW PARALLEL GRIPPERS
SERIES GEP2000

▶ PRODUCT ADVANTAGES

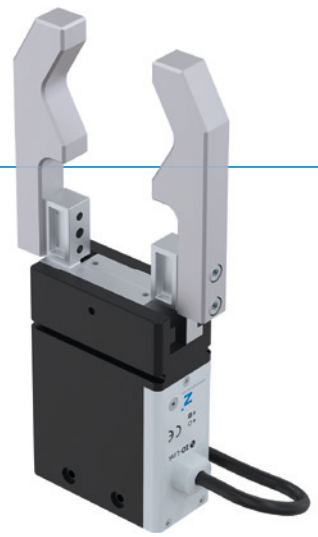

IO-Link

DESIGN AWARD 2018

reddot design award winner 2018

TÜV SÜD

"The electric compact one"

▶ **Largest stroke in small installation space**

Do you require a large stroke, due to the fact that you are operating either a form fit gripper or a large range of parts but the installation space and the load capacity of your application is limited? Then this gripper is perfect for you!

▶ **The simplest activation**

It is your choice whether you want to control the gripper by means of I/O ports—like a valve—or if you prefer the version with IO-Link. Both have this in common: they are easy to integrate into your control system.

▶ **Positionability via IO-Link**

Allows you to position the gripper jaws of the IL-03 and IL-43 variant. In this way, the stroke can be flexibly adapted to the workpiece, which saves time in the process and prevents interfering contours.

▶ SERIES CHARACTERISTICS

Installation size	Variants					
GEP20XX	IL-00	IL-03	IL-43	IO-00	IO-05	IO-45
IO-Link	●	●	●			
Digital I/O				●	●	●
Positionable		●	●			
10 million maintenance-free cycles (max.)	●	●	●	●	●	●
Magnetic field sensor				●		
Integrated sensing	●	●	●		●	●
Gripping force adjustable	●	●	●	●	●	●
Self locking mechanism	●	●	●	●	●	●
Cleanroom-certified	●	●	●	●	●	●
IP40	●	●		●	●	
IP54			●			●

▶ BENEFITS IN DETAIL

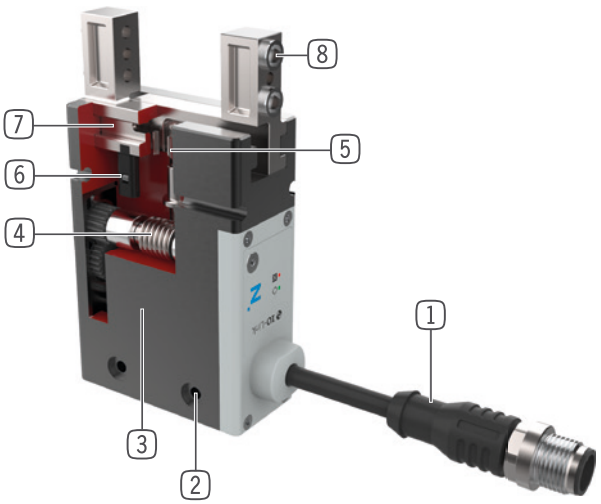

1 **Control**
- Via I/O ports (IO) or via IO-Link (IL)

2 **Mounting and positioning**
- mounting possible from several sides for versatile positioning

3 **BLDC motor**
- wear-resistant brushless DC motor

4 **Helical worm gear**
- self locking mechanism in case of power drop

5 **Synchronization**
- via rack and pinion

6 **Position sensing**
- Permanent magnet for direct query of jaw movement via magnetic field sensors

7 **Gripper jaw**
- individual gripper finger mounting

8 **Removable centering sleeves**
- quick and economical positioning of the gripper fingers

▶ TECHNICAL DATA

Installation size	Stroke per jaw [mm]	Gripping force [N]	Weight [kg]	IP class
GEP2006	6 - 10	40 - 145	0,18 - 0,27	IP40 - IP54
GEP2010	10 - 13	50 - 200	0,31 - 0,47	IP40 - IP54
GEP2013	13 - 16	90 - 360	0,54 - 0,84	IP40 - IP54
GEP2016	16 - 20	125 - 500	0,9 - 1,3	IP40 - IP54

▶ FURTHER INFORMATION

Adjustable gripping force

- Four-level gripping force adjustment via rotary switch for digital gripper control
- For the IO-Link variant, gripping force can be conveniently adjusted using the control system

Operating safety

- Mechanical self-locking mechanism, which means that in the event of a power failure, the workpiece is held securely
- Gripper can be mechanically opened by means of an Allen key

2-JAW PARALLEL GRIPPERS
INSTALLATION SIZE GEP2016

▶ PRODUCT SPECIFICATIONS

▶ Gripping force diagram

Shows the arithmetic total of the individual forces that occur on the gripper fingers, depending on the gripper finger length

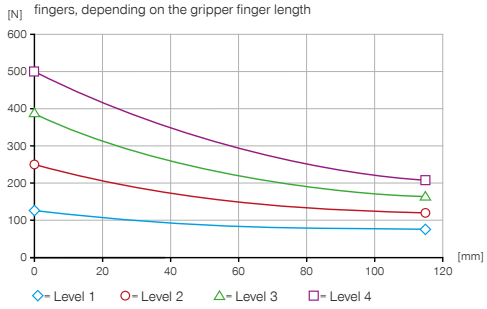

▶ Forces and moments

Displays static forces and moments that can also have an effect, besides the gripping force.

Mr [Nm]	28
Mx [Nm]	28
My [Nm]	20
Fa [N]	450

▶ TECHNICAL DATA

▶ Technical data

Order no.	GEP2016IL-00-B	GEP2016IL-03-B	GEP2016IL-43-B
Control	IO-Link	IO-Link	IO-Link
Positionable		Yes	Yes
Position sensing analog 0 to 10 V			
Position query magnetic field			
Position sensing using process data	Yes	Yes	Yes
Stroke per jaw [mm]	16	16	20
Self locking mechanism	mechanical	mechanical	mechanical
Dead weight of mounted gripper finger max. [kg]	0.21	0.21	0.21
Length of the gripper fingers max. [mm]	120	120	120
Minimum positioning path per jaw [mm]	0.5	0.5	0.5
Repetition accuracy +/- [mm]	0.02	0.02	0.02
Control time [s]	0.055	0.055	0.055
Voltage [V]	24	24	24
Current consumption max. [A]	2	2	2
Operating temperature [°C]	5 ... +60	5 ... +60	5 ... +60
Clean room applications according to DIN EN ISO 14644-1	2	2	2
Certifications	CE / UKCA / LABS / REACH / RoHS	CE / UKCA / LABS / REACH / RoHS	CE / UKCA / LABS / REACH / RoHS
Protection to IEC 60529	IP40	IP40	IP54
Weight [kg]	0.94	0.94	1.3

Order no.	GEP2016IO-00-B	GEP2016IO-05-B	GEP2016IO-45-B
Control	I/O	I/O	I/O
Positionable			
Position sensing analog 0 to 10 V		Yes	Yes
Position query magnetic field	Yes		
Position sensing using process data			
Stroke per jaw [mm]	16	16	20
Self locking mechanism	mechanical	mechanical	mechanical
Dead weight of mounted gripper finger max. [kg]	0.21	0.21	0.21
Length of the gripper fingers max. [mm]	120	120	120
Minimum positioning path per jaw [mm]	0.5	0.5	0.5
Repetition accuracy +/- [mm]	0.02	0.02	0.02
Control time [s]	0.055	0.055	0.055
Voltage [V]	24	24	24
Current consumption max. [A]	2	2	2
Operating temperature [°C]	5 ... +60	5 ... +60	5 ... +60
Clean room applications according to DIN EN ISO 14644-1	2	2	2
Certifications	CE / UKCA / LABS / REACH / RoHS	CE / UKCA / LABS / REACH / RoHS	CE / UKCA / LABS / REACH / RoHS
Protection to IEC 60529	IP40	IP40	IP54
Weight [kg]	0.93	0.94	1.3

▶ TECHNICAL DATA OF THE FORCE LEVELS

	▶ Level 1		
Order no.	**GEP2016IL-00-B**	**GEP2016IL-03-B**	**GEP2016IL-43-B**
Gripping force level 1 [N]	125	125	125
Closing time / Opening time level 1 [s]	0.44 / 0.44	0.44 / 0.44	0.63 / 0.63

Order no.	**GEP2016IO-00-B**	**GEP2016IO-05-B**	**GEP2016IO-45-B**
Gripping force level 1 [N]	125	125	125
Closing time / Opening time level 1 [s]	0.44 / 0.44	0.44 / 0.44	0.63 / 0.63

	▶ Level 2		
Order no.	**GEP2016IL-00-B**	**GEP2016IL-03-B**	**GEP2016IL-43-B**
Gripping force level 2 [N]	250	250	250
Closing time / Opening time level 2 [s]	0.39 / 0.39	0.39 / 0.39	0.52 / 0.52

Order no.	**GEP2016IO-00-B**	**GEP2016IO-05-B**	**GEP2016IO-45-B**
Gripping force level 2 [N]	250	250	250
Closing time / Opening time level 2 [s]	0.39 / 0.39	0.39 / 0.39	0.52 / 0.52

	▶ Level 3		
Order no.	**GEP2016IL-00-B**	**GEP2016IL-03-B**	**GEP2016IL-43-B**
Gripping force level 3 [N]	375	375	375
Closing time / Opening time level 3 [s]	0.35 / 0.35	0.35 / 0.35	0.46 / 0.46

Order no.	**GEP2016IO-00-B**	**GEP2016IO-05-B**	**GEP2016IO-45-B**
Gripping force level 3 [N]	375	375	375
Closing time / Opening time level 3 [s]	0.35 / 0.35	0.35 / 0.35	0.46 / 0.46

	▶ Level 4		
Order no.	**GEP2016IL-00-B**	**GEP2016IL-03-B**	**GEP2016IL-43-B**
Gripping force level 4 [N]	500	500	500
Closing time / Opening time level 4 [s]	0.30 / 0.30	0.30 / 0.30	0.43 / 0.43

Order no.	**GEP2016IO-00-B**	**GEP2016IO-05-B**	**GEP2016IO-45-B**
Gripping force level 4 [N]	500	500	500
Closing time / Opening time level 4 [s]	0.30 / 0.30	0.30 / 0.30	0.43 / 0.43

Based on the international test standard DIN EN ISO 14644-14, the product-related application class ISO 2, according to DIN EN ISO 14644-1, was determined by TÜV SÜD.

2-JAW PARALLEL GRIPPERS
INSTALLATION SIZE GEP2016

▶ TECHNICAL DRAWINGS

① Gripper attachment
② Energy supply IO-Link (M12, 5-pole)
③ Fixing for gripper finger
⑥ Integrated slot for magnetic field sensor
㊹ Energy supply (M8, 4-pole)
㊺ Energy supply (M8, 5-pole)
㊻ Force level setting
㊼ Gripper mounting clamp
㊽ Emergency release

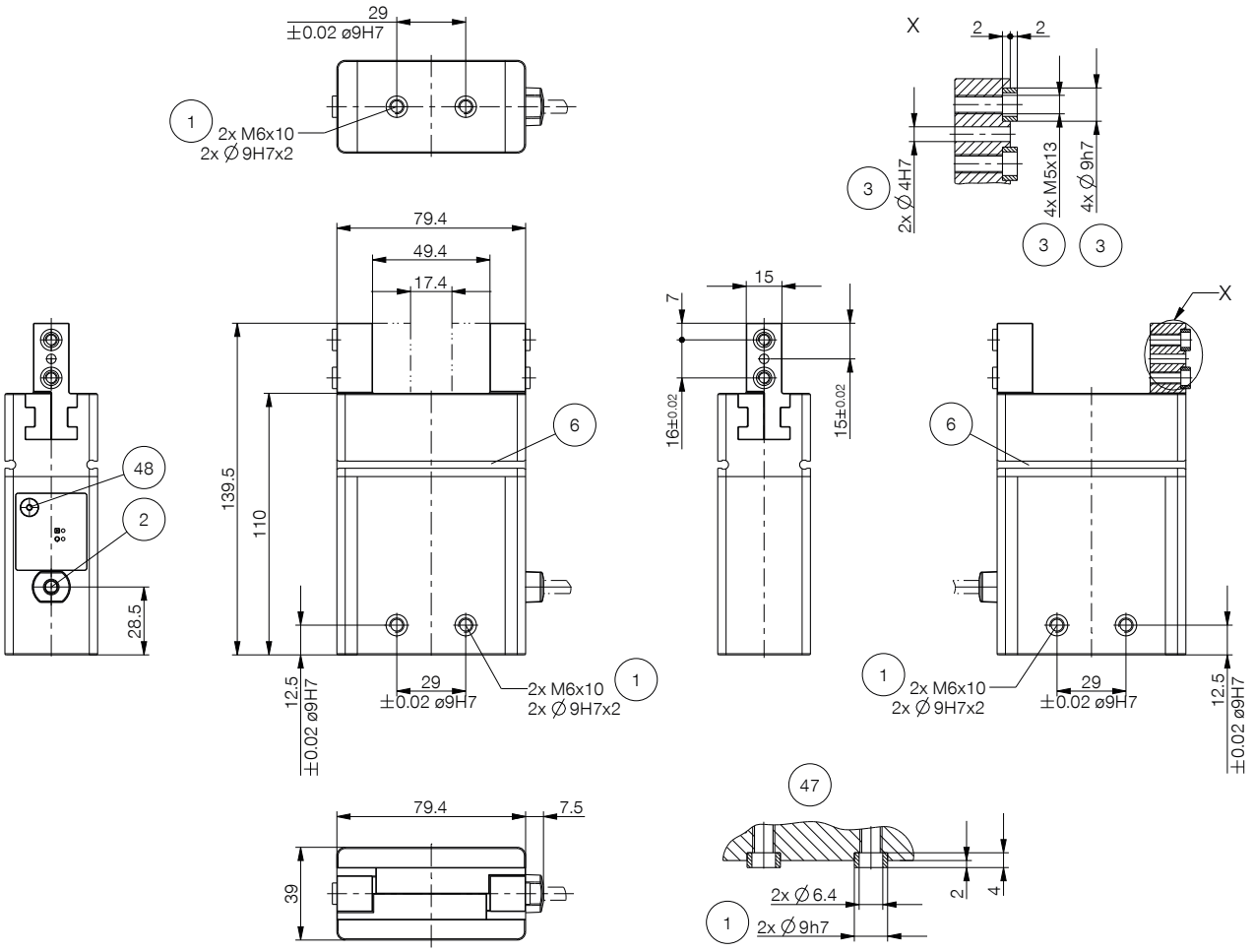

GEP2016IL-00-B / GEP2016IL-03-B	GEP2016IO-00-B	GEP2016IO-05-B

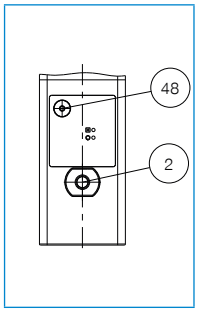

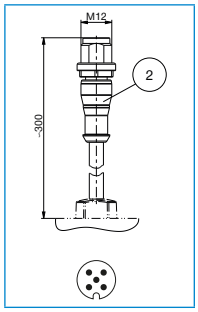

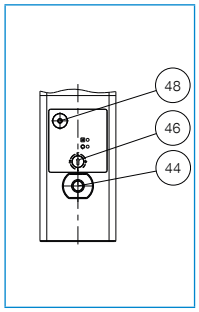

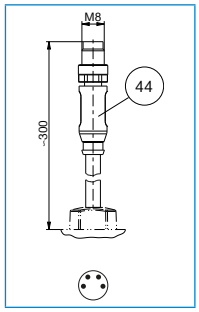

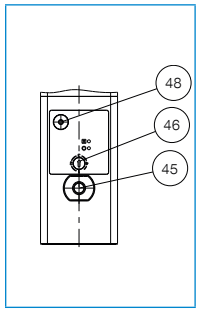

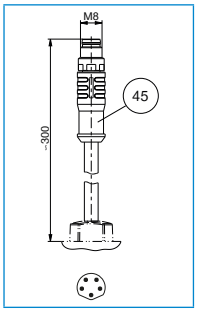

▶ TECHNICAL DRAWINGS

① Gripper attachment
② Energy supply IO-Link (M12, 5-pole)
③ Fixing for gripper finger
㊺ Energy supply (M8, 5-pole)
㊻ Force level setting
㊼ Gripper mounting clamp
㊽ Emergency release

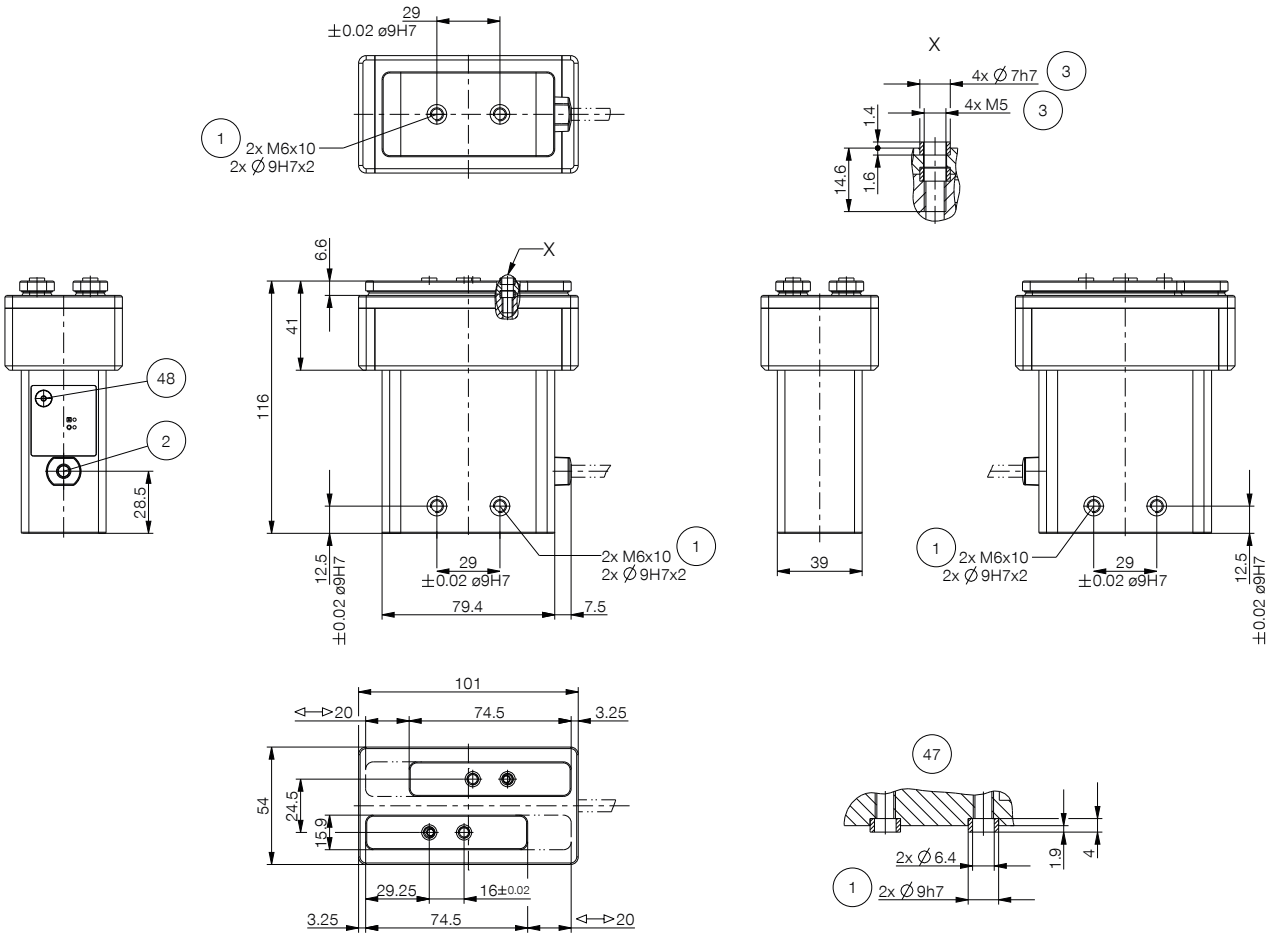

GEP2016IL-43-B	GEP2016IO-45-B

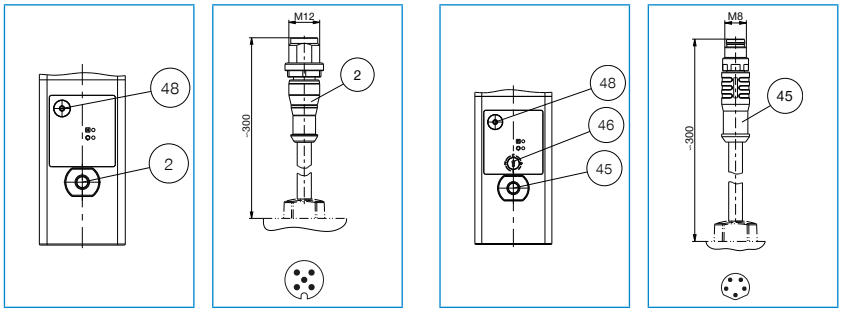

2-JAW PARALLEL GRIPPERS
INSTALLATION SIZE GEP2016

▶ ACCESORIES

▶ INCLUDED IN DELIVERY

6 [piece]
Centering Disc

343453

▶ YOU CAN FIND CONFIGURATION EXAMPLES ON THE FOLLOWING PAGES

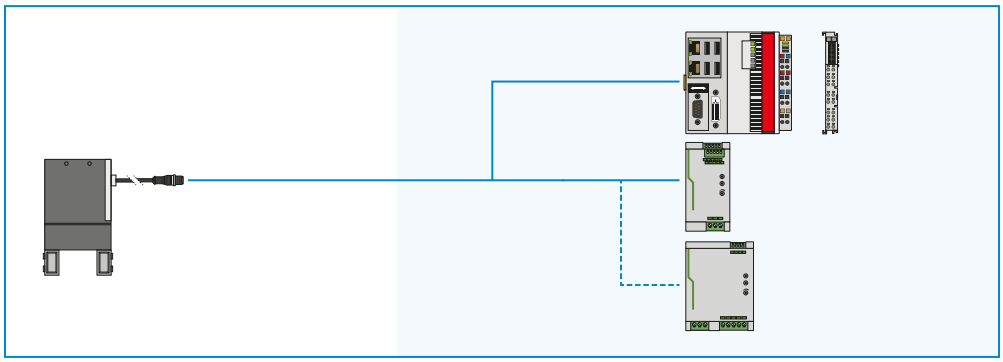

▶ RECOMMENDED ACCESSORY GEP2016IL-00-B / GEP2016IL-03-B / GEP2016IL-43-B

CONNECTIONS / OTHER

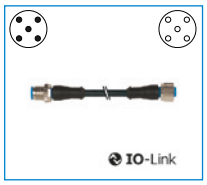

KAG500IL
Plug-in connector straight 5 m - plug, female connector M12

AP2016
Adapter plate

SCM-C-00-00-A
Smart Communication Module

▶ RECOMMENDED ACCESSORY GEP2016IO-00-B

SENSORS

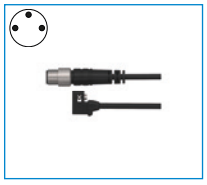

MFS01-S-KHC-P1-PNP
Magnetic field sensor angled, cable 0.3 m - M8 connector

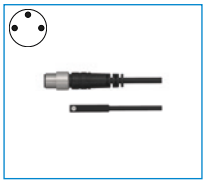

MFS02-S-KHC-P1-PNP
Magnetic field sensor straight, cable 0.3 m - M8 connector

MFS01-S-KHC-P2-PNP
2-point sensor angled, cable 0.3 m - M8 connector

MFS02-S-KHC-P2-PNP
2-point sensor straight, cable 0.3 m - M8 connector

CONNECTIONS / OTHER

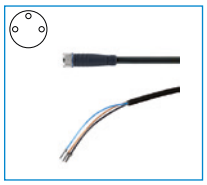

KAG500
Plug-in connector Straight Cable 5m - female connector M8

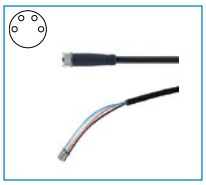

KAG500B4
Plug-in connector Straight Cable 5m - female connector M8

S8-G-3
Plug-in connector customizable Straight - male connector M8

S8-G-4
Plug-in connector customizable Straight - male connector M8

AP2016
Adapter plate

▶ RECOMMENDED ACCESSORY GEP2016IO-05-B / GEP2016IO-45-B

CONNECTIONS / OTHER

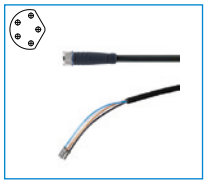

KAG500B5
Plug-in connector Straight Cable 5m - female connector M8

AP2016
Adapter plate

SENSORS

1-point magnetic field sensors – MFS

For non-contact sensing of the piston position

The sensor is clamped in the C-groove of the gripper and detects the magnet attached to the gripper jaws. The MFS02 is available in versions with 5 m cables with exposed leads and 0,3 m cable with connector.

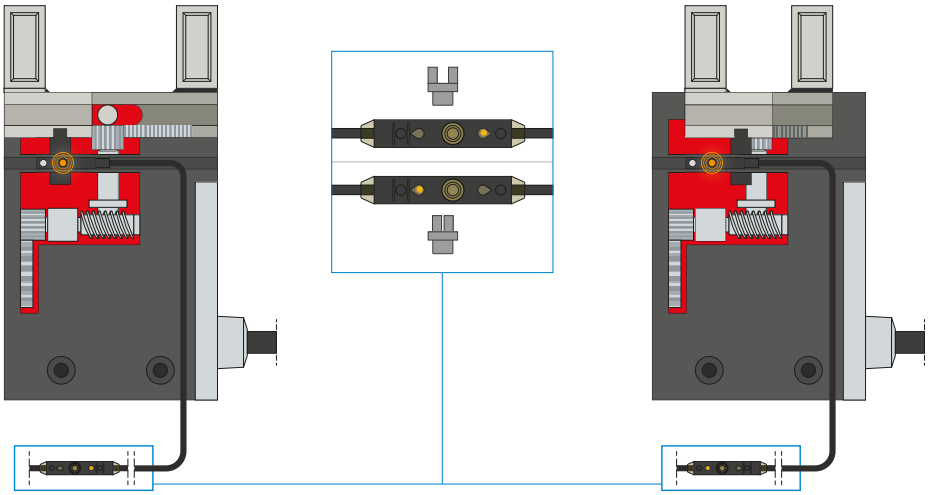

2-point magnetic field sensors – MFS

With two freely programmable switching points

Using the programming unit integrated in the cable, two switch points can be freely defined for this sensor. To do so, the sensor is clamped in the C-groove, the gripper approaches position one and the position is taught in using the teach button. Afterwards, the second position is approached with the gripper and programmed. To ensure use in a wide variety of space conditions, the sensors are available in two variants. While the horizontal MFS02, with straight cable outlet, disappears into the C-groove of the gripper almost completely, the vertical MFS01 is taller, but has a cable outlet that is offset at an angle of 90°. The sensors are available in versions with 5 m cables with exposed leads and 0,3 m cable with connector.

CONNECTIONS / OTHER

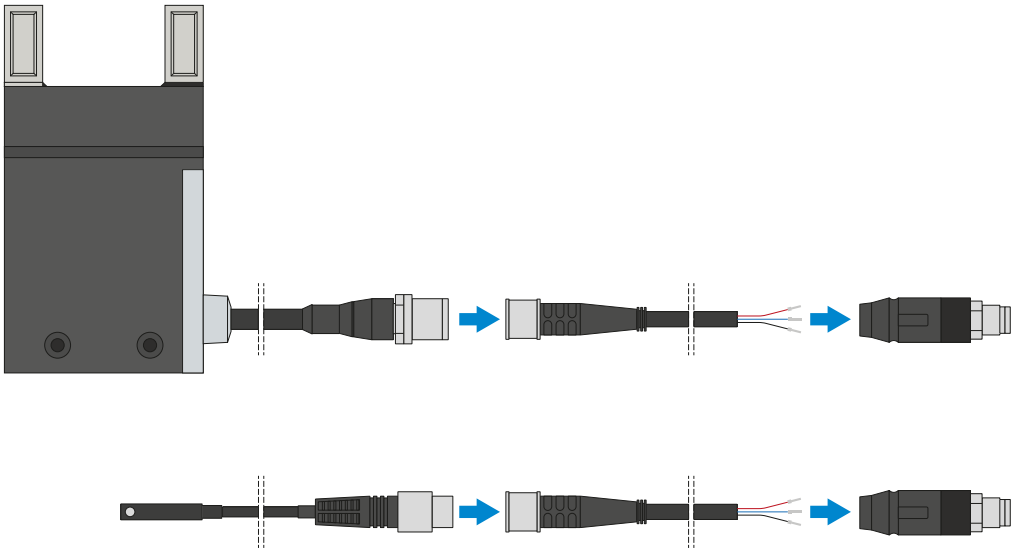

Plug-in connectors

For extending and fabricating the connection lines

Cables with a length of 5 m with exposed leads are available. Depending on the specific needs, the cables can be shortened or fabricated with connectors in sizes M8 and M12. A 5 m long cable with male connector /female connector is available for the IO-Link connection.

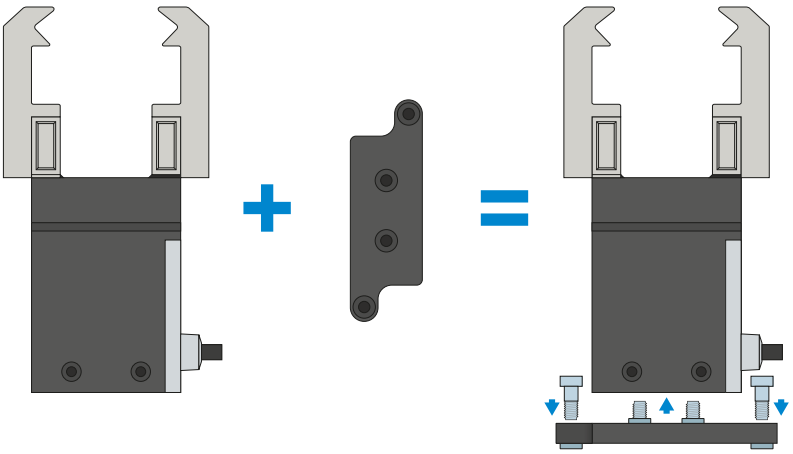

Adapter plate

Additional screw connection option

By attaching the optional adapter plate, the gripper can also be screwed on vertically (from above) if the fastening options integrated into the gripper housing cannot be used for space reasons.

CONNECTIONS / OTHER

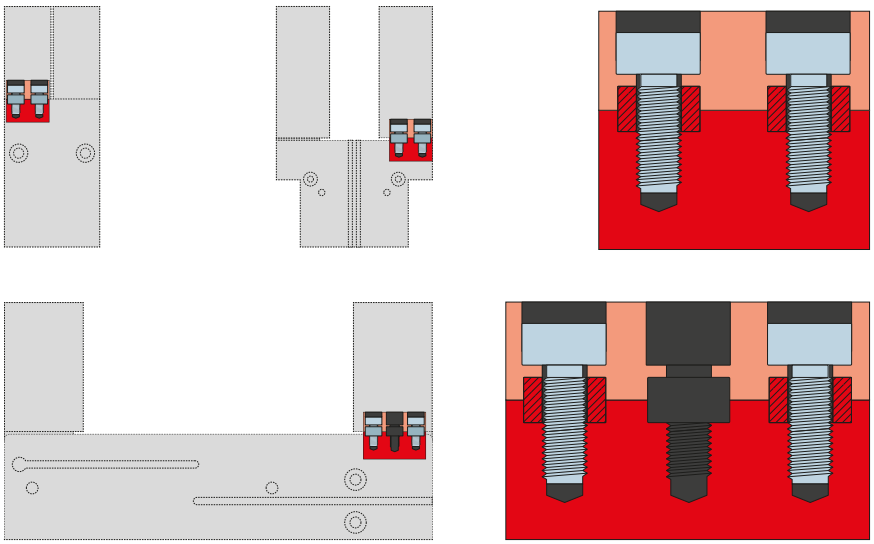

Centering sleeves

For defined position measurement of the gripper fingers

The centering sleeves are inserted into the fits of the gripper jaws to define the position of the gripper fingers. The centering sleeves are comparable to a pin connection.

CONTROL
GEP2000 SERIES

1 ▶ IO-LINK CONTROL — GEP2000IL-00-B / GEP2000IL-03-B / GEP2000IL-43-B

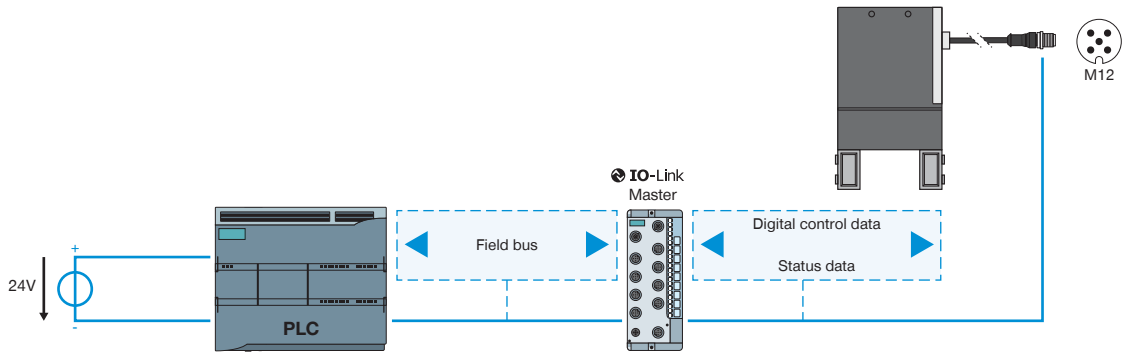

2 ▶ DIGITAL CONTROL — GEP2000IO-00

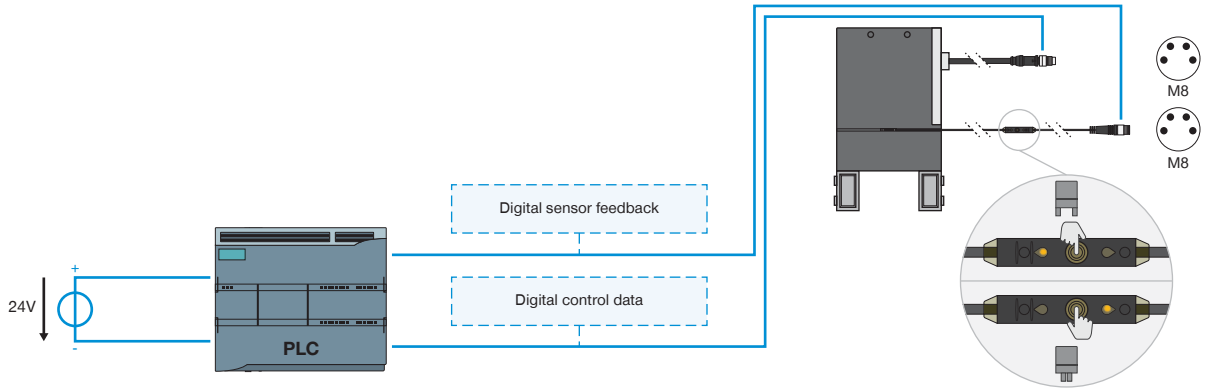

3 ▶ DIGITAL CONTROL + ANALOG SENSING — GEP2000IO-05-B / GEP2000IO-45-B

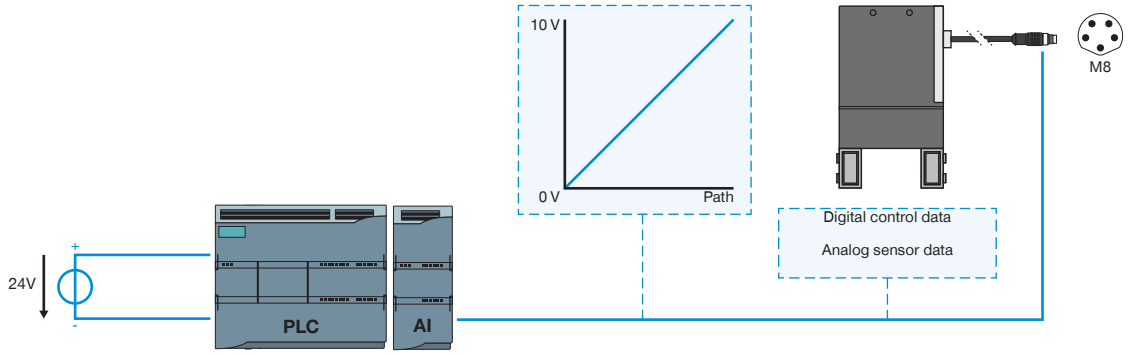

1 ▶ IO-LINK CONTROL — GEP2000IL-00-B / GEP2000IL-03-B / GEP2000IL-43-B

- Single-cable solution—control system data, status/sensor data and power supply over a single cable
- Bi-directional data transmission
- Gripping force and gripping speed can be configured using software
- 32 workpieces data sets can be programmed
- Parts detection in range of +/- 0.05 mm with freely teachable area
- Status data such as temperature and cycle number can be read out
- Can be integrated into ZIMMER HMI
- Positionable (only variant IL-03 / IL-43)

2 ▶ DIGITAL CONTROL — GEP2000IO-00

- Single-cable solution—control system data and power supply over a single cable
- Gripper commissioning by means of digital signals
- Optional digital gripper position feedback via external sensors
- Gripping force adjustment in four levels to the object being gripped, using rotary switch
- Can be integrated into ZIMMER HMI

3 ▶ DIGITAL CONTROL + ANALOG SENSING — GEP2000IO-05-B / GEP2000IO-45-B

- Single-cable solution—control system data, sensor data and power supply over a single cable
- Gripper activation by means of digital signals
- Integrated analog feedback of the gripper position
- Gripping force adjustment in four levels to the object being gripped, using rotary switch
- Can be integrated into ZIMMER HMI

SECURED CONFIGURATION EXAMPLES
GEP2000 SERIES

▶ GEP2000IL (IO-LINK) WIRING TO CONTROL CABINET (BECKHOFF)

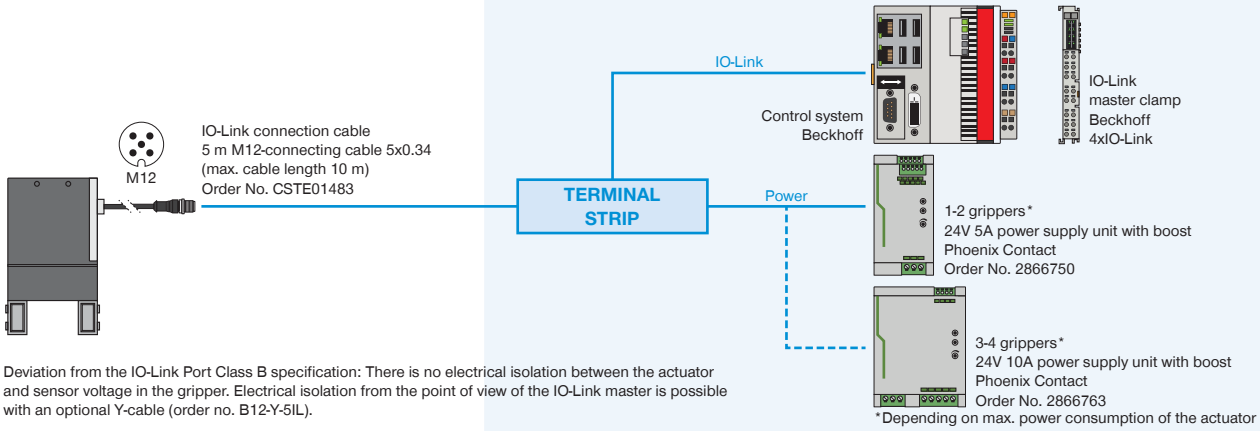

Deviation from the IO-Link Port Class B specification: There is no electrical isolation between the actuator and sensor voltage in the gripper. Electrical isolation from the point of view of the IO-Link master is possible with an optional Y-cable (order no. B12-Y-5IL).

▶ GEP2000IL (IO-LINK) WIRING TO CONTROL CABINET (SIEMENS)

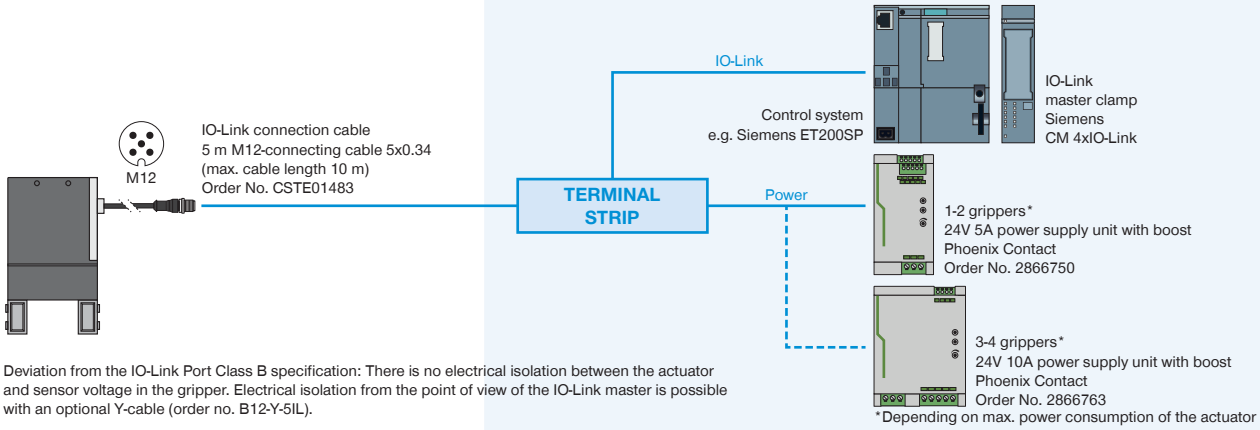

Deviation from the IO-Link Port Class B specification: There is no electrical isolation between the actuator and sensor voltage in the gripper. Electrical isolation from the point of view of the IO-Link master is possible with an optional Y-cable (order no. B12-Y-5IL).

▶ GEP2000IL (IO-LINK) WIRING TO IO-LINK MASTER IP67 (BECKHOFF)

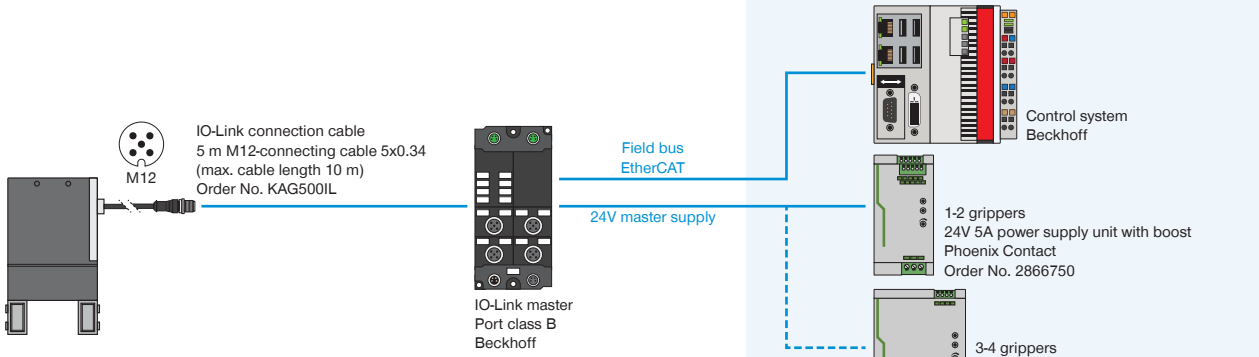

Deviation from the IO-Link Port Class B specification: There is no electrical isolation between the actuator and sensor voltage in the gripper. Electrical isolation from the point of view of the IO-Link master is possible with an optional Y-cable (order no. B12-Y-5IL).

▶ GEP2000IL (IO-LINK) WIRING TO IO-LINK MASTER IP67 (SIEMENS)

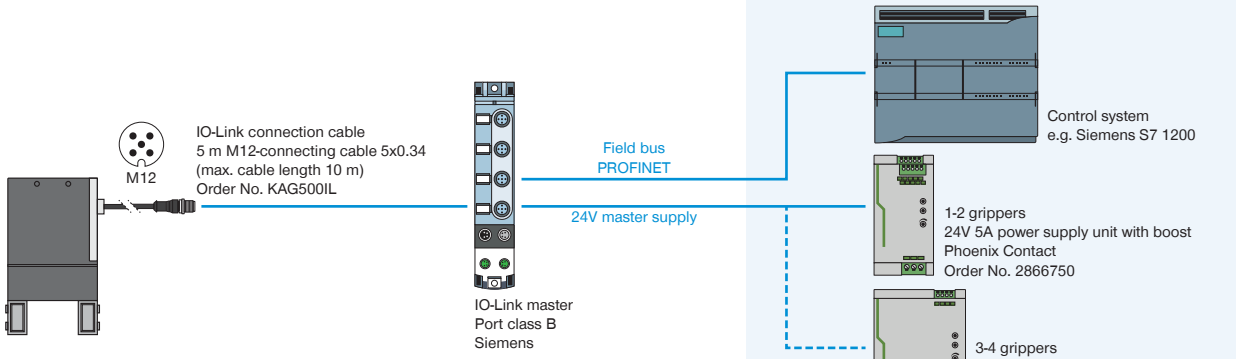

Deviation from the IO-Link Port Class B specification: There is no electrical isolation between the actuator and sensor voltage in the gripper. Electrical isolation from the point of view of the IO-Link master is possible with an optional Y-cable (order no. B12-Y-5IL).

▶ GEP2000IO-00 (DIGITAL IO) WIRING TO CONTROL CABINET

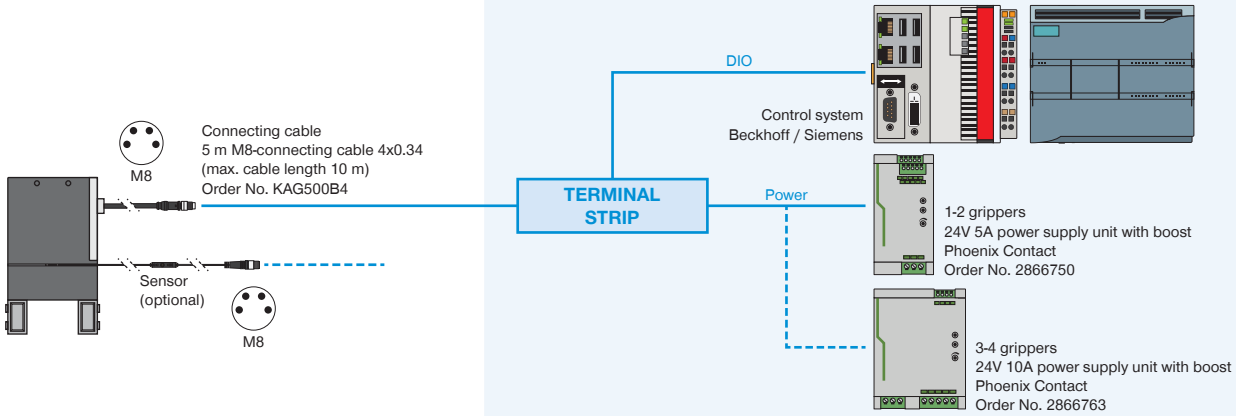

▶ GEP2000IO-05 / -45 (DIGITAL IO / ANALOG) WIRING TO CONTROL CABINET

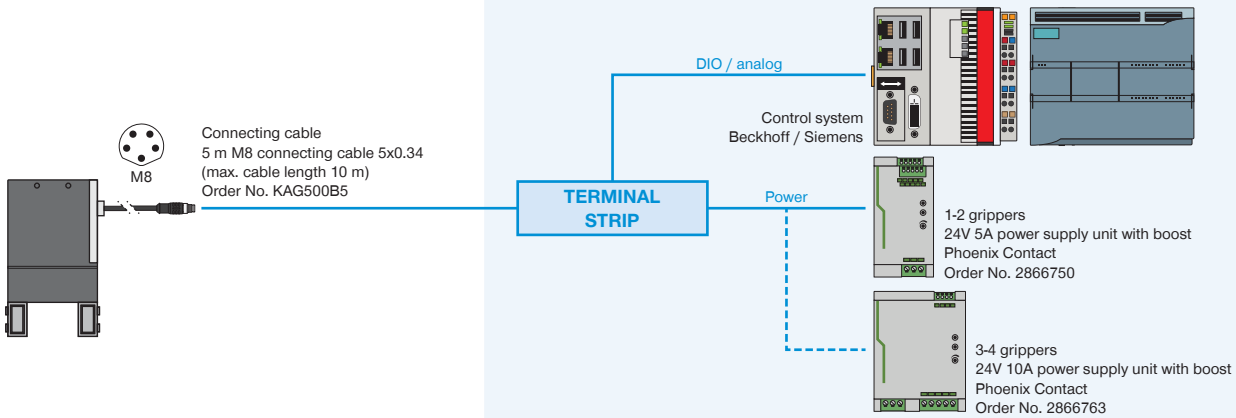

IO-LINK MEETS DIGITAL I/O
SMART COMMUNICATION MODULE

IO-Link meets digital I/O

The Smart Communication Module (SCM) is a master gateway that is suitable for all IO-Link components. With its two channels, the SCM can control two devices and on a functional level, offers the direct implementation of IO-Link to digital I/O. The module thus makes it possible to integrate IO-Link devices into a digital infrastructure and utilize almost the full extended range of functions of the IO-Link device.

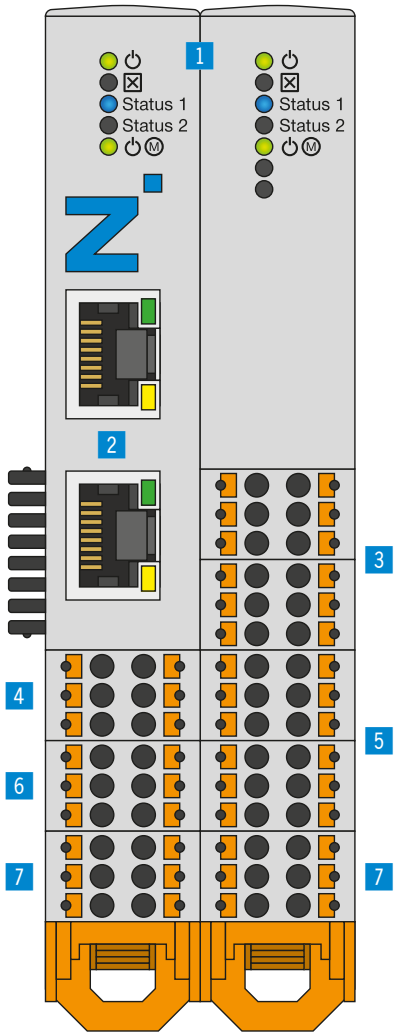

▶ PRODUCT ADVANTAGES

- **Translates IO-Link to digital inputs and outputs (digital I/O) and from digital I/O to IO-Link**
- **Easy control of intelligent IO-Link grippers via 24 V digital I/O**
- **Configuration and training take place using the corresponding intuitive guideZ software**
- **Ready-to-connect cable set for the corresponding controller type**
- **Can be used with one or two grippers depending on the flexibility required**
- **Depending on the required flexibility, up to 15 different workpieces can be used for one gripper. Alternatively, two grippers can be used.**

▶ BENEFITS IN DETAIL

1 **Status**
- Status display of SCM and IO-Link device

2 **Ethernet RJ45**
- Temporary connection for gripper configuration

3 **Digital input**
- Digital inputs for controlling the gripper actuators

4 **IO-Link / Device 1**
- Gripper module 1 connection

5 **Digital output**
- Digital outputs for monitoring the gripper sensors

6 **IO-Link / Device 2**
- Gripper module 2 connection

7 **Power supply**
- Voltage supply SCM and gripper

	▶ Technical Data
Order no.	**SCM-C-00-00-A**
Control	Digital I/O
IO logic	PNP
Number of grippers, max.	2
Number of pins (control system input)	12
Number of pins (control system output)	12
Configuration for interface	Ethernet RJ45
Mounting options	35 mm top-hat rail
Voltage [V]	24
Load supply peak current [A]	10
Logic supply peak current [A]	1
Operating temperature [°C]	5 ... +50
Certifications	CE / UKCA / LABS / REACH / RoHS
Protection to IEC 60529	IP20
Weight [kg]	0.26

TOPOLOGY
CONNECTION

Configuration and operation

Up to two Zimmer IO-Link devices can be connected to one Smart Communication Module. The digital inputs and outputs are wired directly to the robot controller or PLC. Simple digital control enables bidirectional communication. To configure the gripper parameters, a temporary network connection is established to a commercially available PC.

As soon as the parameters have been configured intuitively, this connection is no longer necessary. Next, the handling unit is automatically controlled directly via robot controller or PLC.

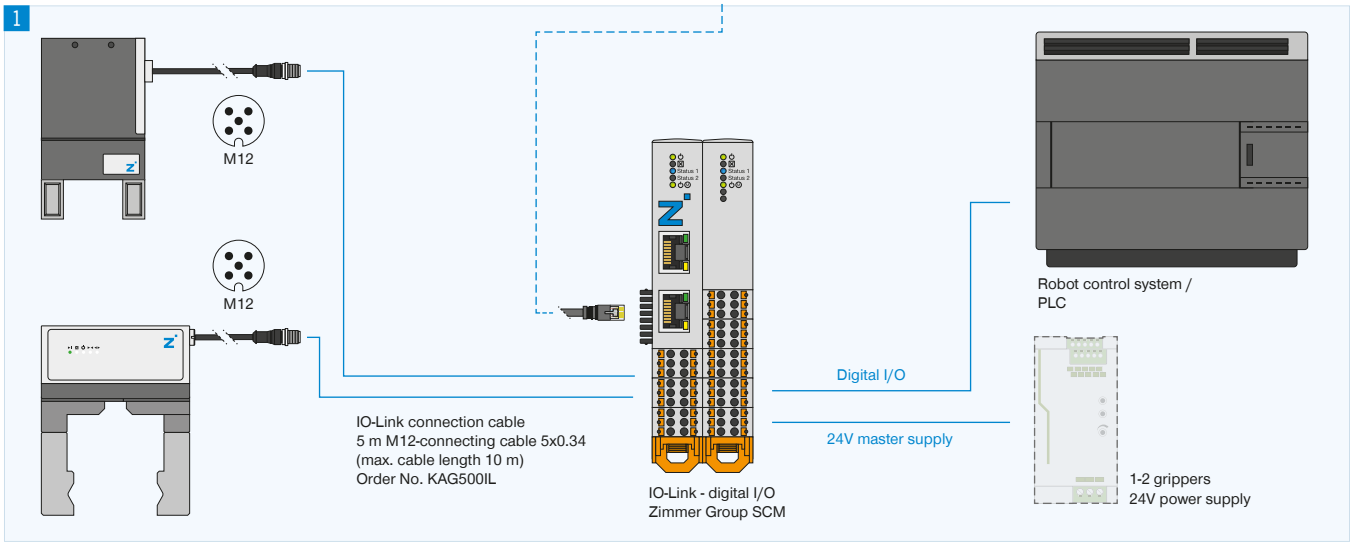

1 Connection

- IO-Link gripper
- Digital I/Os on the robot control system/PLC
- Power supply

2 Configuration

Temporary network connection via PC for use of the guideZ, expertZ and monitorZ software

▶ FURTHER INFORMATION IS AVAILABLE ONLINE

All information just a click away at: www.zimmer-group.com. Find data, illustrations, 3D models and operating instructions for your installation size using the order number for your desired product. Quick, clear and always up-to-date.