O-RING ASSEMBLY GRIPPERS, OUTER
SERIES GS

▶ PRODUCT ADVANTAGES

- **Proven technology**

  We have more than 20 years of proven reliability, which ensures uninterrupted production for you

- **Adjustable expanding stroke**

  Prevents the O-ring from overexpanding and ensures consistent production quality

- **Query about magnetic field sensor technology**

  Detecting the end position allows you to have shorter cycle times and an integrated control system

▶ SERIES CHARACTERISTICS

	Installation size
	GSXXXX
5 million maintenance-free cycles (max.)	●
Inductive sensor	●
Magnetic field sensor	●
IP30	●

▶ BENEFITS IN DETAIL

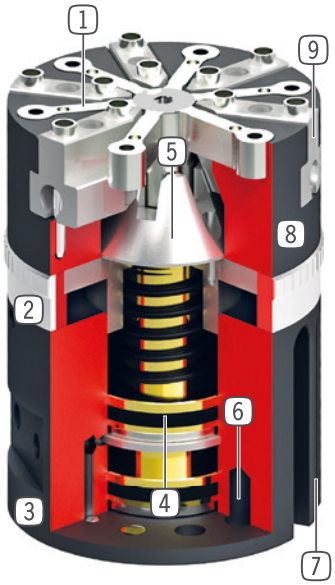

1 **Ejector jaw**
- to shift off the O-ring

2 **Stroke adjustment**
- for adjustment of the spread stroke

3 **Energy supply**
- possible from several sides

4 **Drive**
- two single-acting pneumatic cylinders

5 **Force transfer**
- direct via taper

6 **Mounting and positioning**
- axial, on the gripper bottom

7 **Sensing slot**
- mounting and positioning of magnetic field sensors

8 **Robust, lightweight housing**
- Hard-coated aluminum alloy

9 **Gripper jaw**
- individual gripper finger mounting

▶ TECHNICAL DATA

Installation size	Opening stroke adjustable per jaw [mm]	Recommended O-ring diameter [mm]	Weight [kg]	IP class
GS65	3 - 6	4 - 60	0.52	IP30
GS810	4 - 8	30 - 120	2.5	IP30
GS1015	1.6 -10	40 - 150	6.2	IP30

▶ FURTHER INFORMATION IS AVAILABLE ONLINE

All information just a click away at: www.zimmer-group.com. Find data, illustrations, 3D models and operating instructions for your installation size using the order number for your desired product. Quick, clear and always up-to-date.

O-RING ASSEMBLY GRIPPERS, OUTER
INSTALLATION SIZE GS1015

▶ PRODUCT SPECIFICATIONS

▶ INCLUDED IN DELIVERY

2 [piece]
Mounting block
KB8K

20 [piece]
Centering Disc
DST60800

▶ RECOMMENDED ACCESSORIES

GRIPPING COMPONENTS

UB1015-3
Ejector jaw set aluminium
10 [piece]

UB1015-4
Expanding jaw set steel
10 [piece]

ENERGY SUPPLY

GV1-8X8
Straight Fittings - Quick Connect Style

SENSORS

NJ8-E2
Inductive proximity switch - Cable 5 m

NJ8-E2S
Inductive proximity switch – M8

SENSORS

MFS01-K-KHC-P1-PNP
Magnetic field sensor angled, cable 5 m

MFS01-S-KHC-P1-PNP
Magnetic field sensor angled, cable 0.3 m - M8 connector

CONNECTIONS / OTHER

KAG500
Plug-in connector Straight Cable 5m - female connector M8

KAW500
Plug-in connector Angled Cable 5m - female connector M8

S8-G-3
Plug-in connector customizable Straight - male connector M8

	► Technical data
Order no.	**GS1015-B**
Opening stroke adjustable per jaw min. [mm]	1.6
Opening stroke adjustable per jaw max. [mm]	10
Stripping stroke [mm]	15
Opening force [N]	1450
Recommended O-ring diameter min. [mm]	40
Recommended O-ring diameter max. [mm]	150
Number of gripping jaws [Quantity]	10
Closing time [s]	0.05
Opening time [s]	0.05
Repetition accuracy +/- [mm]	0.05
Operating pressure min. [bar]	3
Operating pressure max. [bar]	8
Nominal operating pressure [bar]	6
Operating temperature min. [°C]	5
Operating temperature max. [°C]	+80
Certifications	LABS / REACH / RoHS
Protection to IEC 60529	IP30
Weight [kg]	6.2

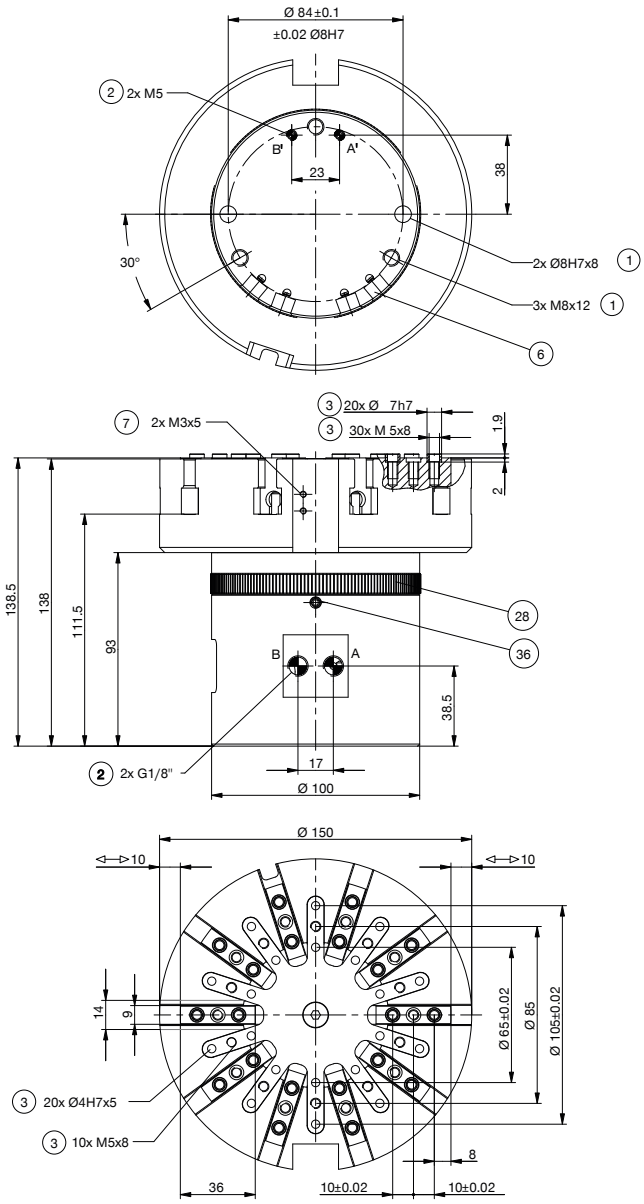

1 Gripper attachment
2 Energy supply
3 Fixing for gripper finger
6 Integrated slot for magnetic field sensor
7 Fixing for mounting block
28 Adjustment ring
36 Arrestor for adjustment ring
38 Adapter
39 Gripper
A Air connection (expanding stroke)
B Air connection (ejector stroke)
B' Air connection alternate (expanding stroke)
A' Air connection alternate (ejector stroke)

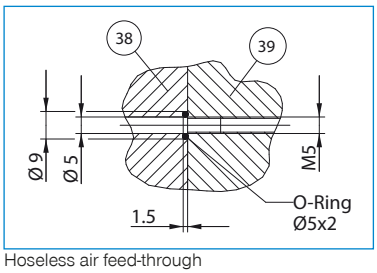

Hoseless air feed-through

O-RING ASSEMBLY GRIPPER, OUTER
SERIES GS FUNCTIONAL DESCRIPTION

GRIPPING COMPONENTS

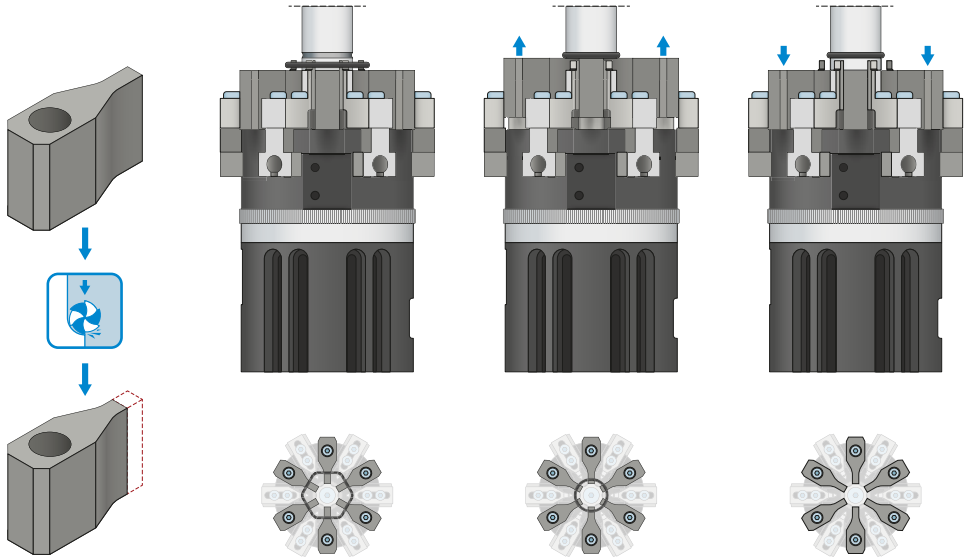

Removal jaws

The removal jaws remove the spread O-ring on the workpiece.

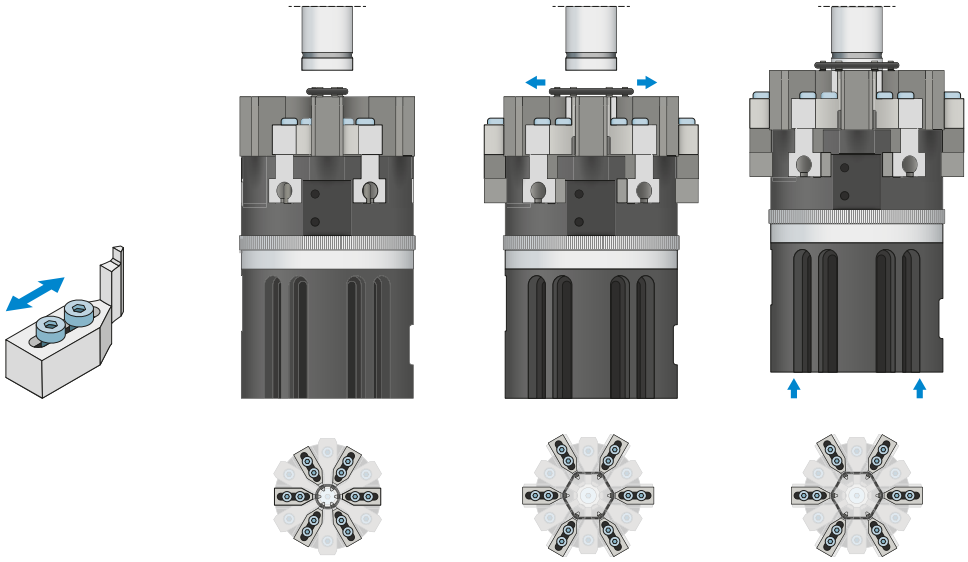

Clamping jaws

Using the clamping jaws, the O-ring is expanded to the expanding stroke set previously on the gripper via the adjustment ring.

ENERGY SUPPLY

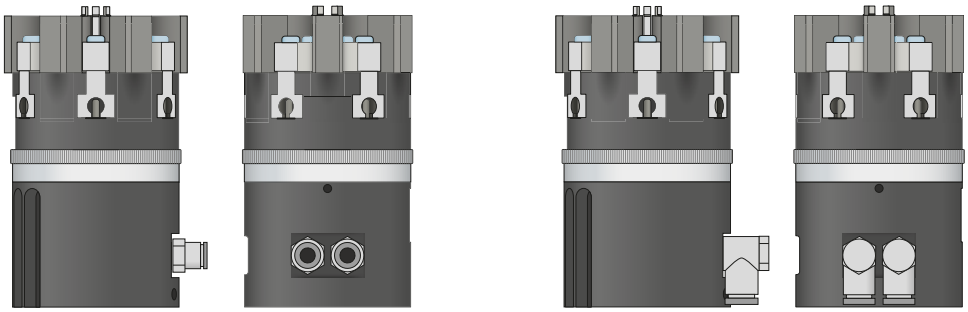

Pneumatic threaded connections

Available in straight and angled design. Can be chosen freely depending on the space conditions or installation situation.

SENSORS

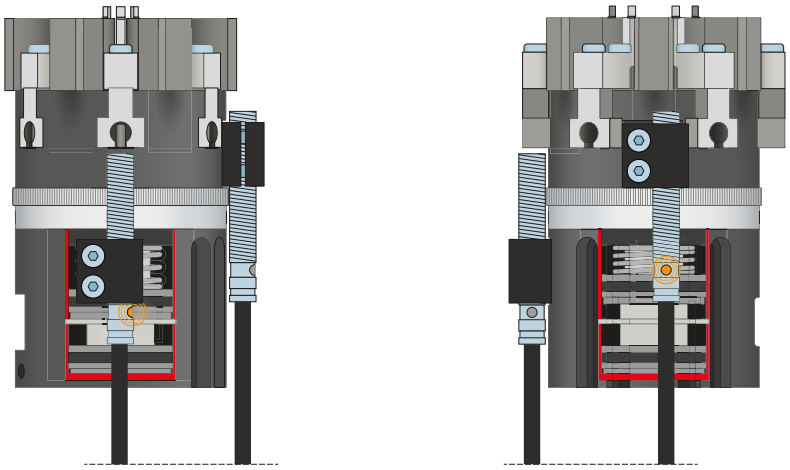

Inductive sensors – NJ

The expanding stroke can be sensed using an inductive sensor in combination with a mounting block. The cam switch must be manufactured on an application-specific basis.

O-RING ASSEMBLY GRIPPER, OUTER
SERIES GS FUNCTIONAL DESCRIPTION

SENSORS

MFS01

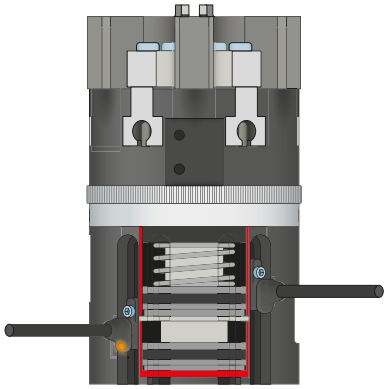

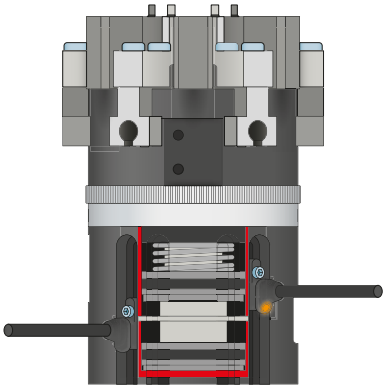

1-point magnetic field sensors – MFS

For non-contact sensing of the piston position

The sensor is clamped in the C-groove of the gripper and detects the magnet attached to the gripper jaws. The MFS01 is available in versions with 5 m cables with exposed leads and 0,3 m cable with connector.

CONNECTIONS / OTHER

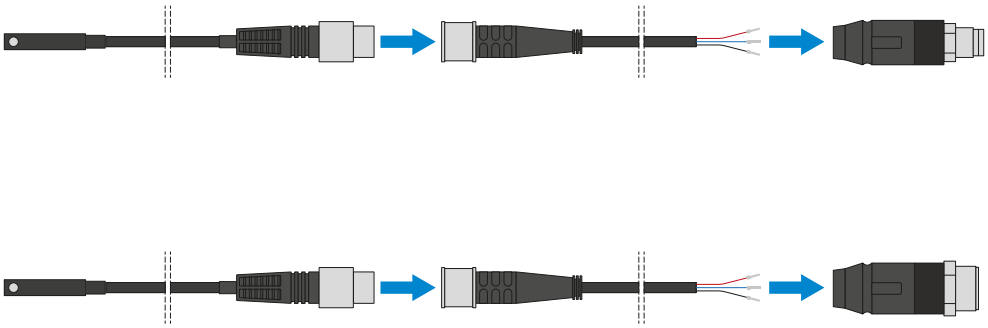

Plug-in connectors

For extending and fabricating the connection lines for the sensors

Cables with a length of 5 m with exposed leads are available. Depending on the specific needs, the cables can be shortened or fabricated with connectors in sizes M8 and M12.

CONNECTIONS / OTHER

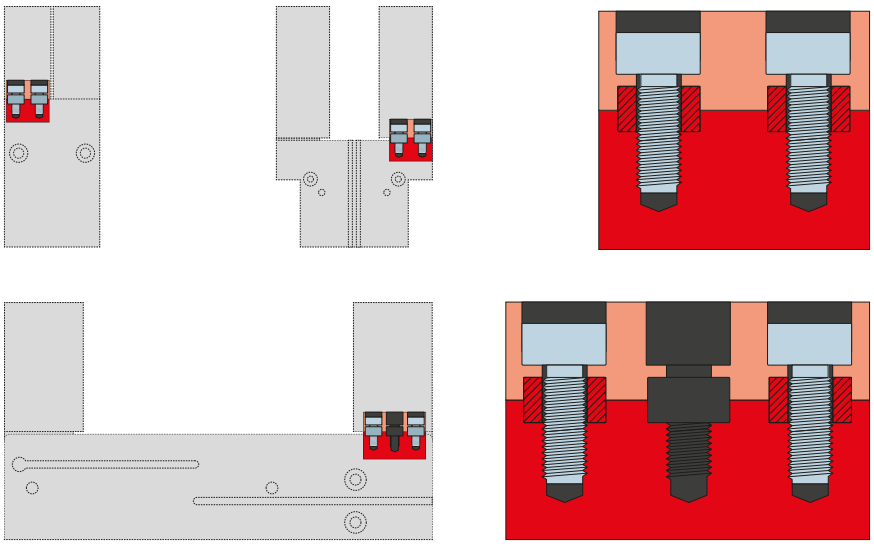

Centering sleeves

For defined position measurement of the spread jaws

The centering sleeves are inserted into the fits of the gripper jaws to define the position of the spread jaws. The centering sleeves are comparable to a pin connection.