LINEAR CYLINDERS
SERIES LI

▶ PRODUCT ADVANTAGES

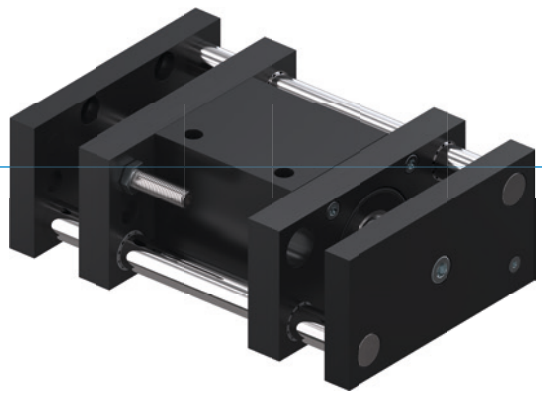

▶ **Large locating flange**

The large mounting surface simplifies your design and allows secure attachment of follow-on tools

▶ **Dampened end position**

By using PowerStop shock absorbers, you can gently move up to the end positions, increasing the process reliability and durability of your application

▶ **Failure-free continuous operation**

Our uncompromising “Made in Germany” quality guarantees up to 10 million maintenance-free cycles

▶ SERIES CHARACTERISTICS

Installation size	Version		
LIXX		D	S
2 way guiding			●
3 way guiding		●	
Continuous piston rod		●	
10 million maintenance-free cycles (max.)	●	●	●
Inductive sensor	●	●	●
Elastomer end position damping	●	●	●
Powerstop end position damping	●	●	●
IP54	●	●	●

▶ BENEFITS IN DETAIL

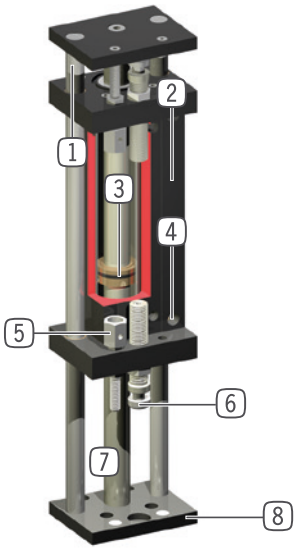

1 **Guide rod**
- hardened, polished steel shaft

2 **Mounting block**
- mounting for inductive proximity switch

3 **Drive**
- double-acting pneumatic cylinder

4 **Energy supply**
- reducing exhaust air is recommended

5 **End stop confirmation screw**
- direct flange position sensing
- available as an accessory

6 **End position damping**
- with elastomer absorber or patented hydraulic shock absorber

7 **Piston rod**
- polished, hard chrome plated steel
- continuous in design D

8 **Intake flange**
- for connection to application-specific adapter plate (to be supplied by the customer)

▶ TECHNICAL DATA

Installation size	Stroke [mm]	Pressure force max. [N]	Retraction force [N]	Weight [kg]	IP class
LI16	20 - 50	80 - 100	80	0,05 - 0,1	IP54
LI30	15 - 90	200 - 270	200	0,05 - 0,1	IP54
LI40	40 - 300	270 - 450	270	0,05 - 0,3	IP54
LI50	50 - 300	950	950	0,03 - 0,2	IP54

▶ FURTHER INFORMATION IS AVAILABLE ONLINE

All information just a click away at: www.zimmer-group.com. Find data, illustrations, 3D models and operating instructions for your installation size using the order number for your desired product. Quick, clear and always up-to-date.

LINEAR CYLINDERS
LI30-60 / LI30-90

▶ PRODUCT SPECIFICATIONS

▶ **Forces and moments**

Max allowable static forces and moments.

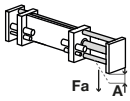

▶ RECOMMENDED ACCESSORIES

ENERGY SUPPLY

DRVM5X4
Flow Control Valves - with Swivel joint

SENSORS

NJ12-E2S
Inductive proximity switch, M12

CONNECTIONS / OTHER

AP30
Adapter plate

AD-M10X1
Shock Absorbers

CONNECTIONS / OTHER

HV30
Absorber intake

PHE10X10NMDE-A
Industrial shock absorbers PowerStop

KAG500
Plug-in connector Straight Cable 5m - female connector M8

KAW500
Plug-in connector Angled Cable 5m - female connector M8

ZE20H7X4
Centering Disc

	► Technical data	
Order no.	**LI30-60**	**LI30-90**
Stroke [mm]	60	90
Pressure force max. [N]	270	270
Retraction force [N]	200	200
Travel time without external load [s]	0.25	0.26
Nominal operating pressure [bar]	6	6
Operating temperature min. [°C]	5	5
Operating temperature max. [°C]	+80	+80
Air volume per cycle [cm³]	50	92
Certifications	LABS / REACH / RoHS	LABS / REACH / RoHS
Protection to IEC 60529	IP54	IP54
Weight [kg]	0.47	0.58
Load Fa max. [N]	30	20
Max. deflection A [mm]	0.05	0.05

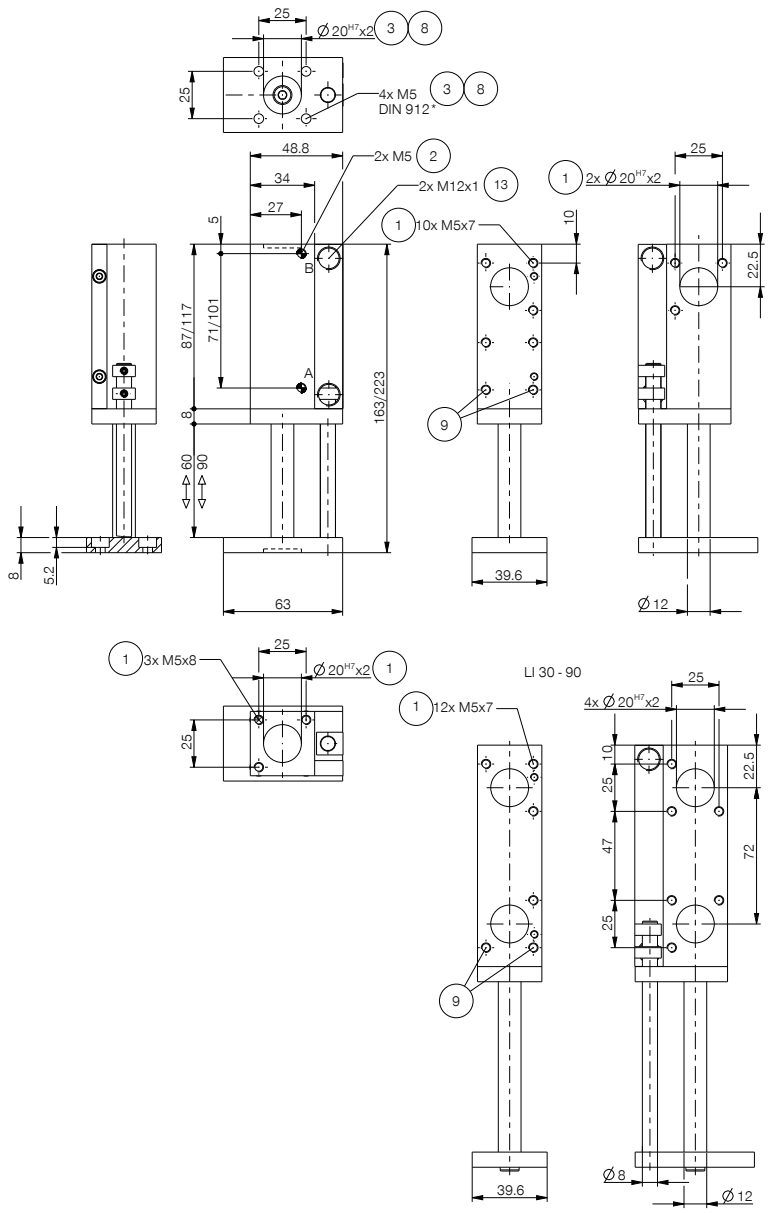

1. Fixing linear cylinder
2. Energy supply
3. Fixing application
8. Fixing for adapter plate
9. Fixing for HV-flange
13. Intake proximity switch
A. Air connection (retract)
B. Air connection (extend)