SWIVEL JAWS
SERIES SBZ

▶ PRODUCT ADVANTAGES

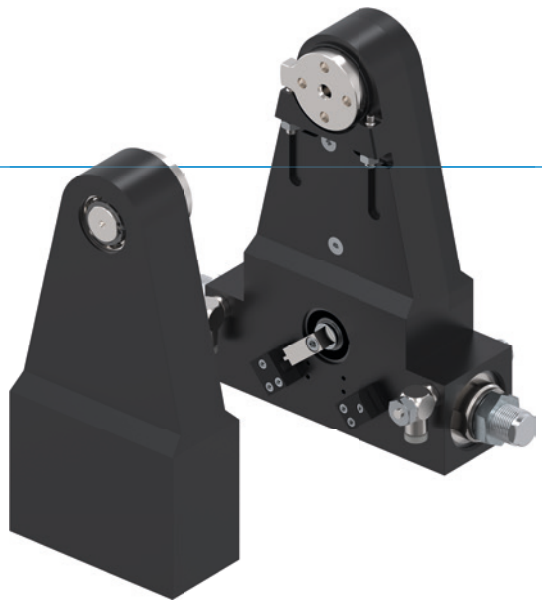

“The superior”

- **Shock absorber with spiral groove technology**

  Superior end position damping lets you swivel more mass in the shortest amount of time, increasing your machine’s component output

- **Force transmission via gear wheel set**

  The robust gear wheels stand for precision, reliability and long service life and guarantee smooth operation

- **Failure-free continuous operation**

  Our uncompromising “Made in Germany” quality guarantees up to 10 million maintenance-free cycles

▶ SERIES CHARACTERISTICS

Installation size	Version		
SBZXXX	-90	-180	G
10 million maintenance-free cycles (max.)	●	●	
IP54	●	●	
Inductive sensor	●	●	
Flange	●	●	●
Powerstop end position damping	●	●	
End positions adjustable +/- 3	●	●	
Positionability - 2 positions	●	●	
Rotation angle 90°	●		●
Rotation angle 180°		●	●
Counter bearing without drive			●

▶ BENEFITS IN DETAIL

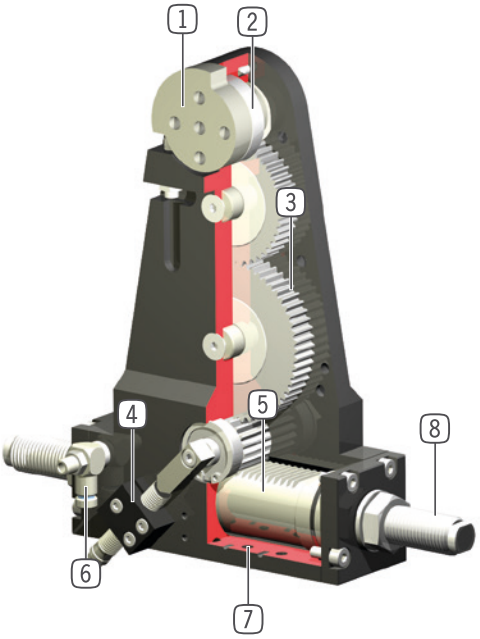

1 **Two way bearing drive shaft**
- high forces and moments capacity

2 **Drive flange**
- large size drive flange with end stop and large central hole (from SB150)

3 **Force transfer**
- stable gear wheel set
- precise, reliable, durable

4 **Position sensing**
- inquiry of end positions 0° and 90° (or180°) via inductive proximity switch
- adjustable on rotatable switch cam

5 **Drive**
- double-acting pneumatic cylinder

6 **Air flow control valve**
- for speed regulation (included in the delivery)

7 **Mounting and positioning**
- mounting possible from several sides for versatile positioning

8 **Integrated and patented hydraulic shock absorbers**
- adjustable end position damping

▶ TECHNICAL DATA

Installation size	Swivel angle [°]	Torque [Nm]	Weight [kg]	IP class
SB50	90 - 180	1,2	0,47 - 0,73	IP54
SB74	90 - 180	3,5	1,1 - 1,7	IP54
SB100	90 - 180	10	2,7 - 4,1	IP54
SB150	90 - 180	23	6,6 - 11	IP54
SB190	90 - 180	57	20 - 27	IP54

▶ FURTHER INFORMATION IS AVAILABLE ONLINE

All information just a click away at: www.zimmer-group.com. Find data, illustrations, 3D models and operating instructions for your installation size using the order number for your desired product. Quick, clear and always up-to-date.

SWIVEL JAWS
INSTALLATION SIZE SB74

▶ PRODUCT SPECIFICATIONS

▶ Moment of inertia

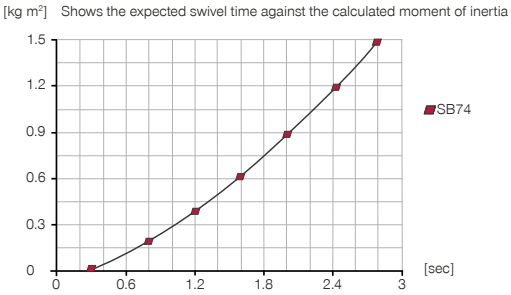

▶ Forces and moments

Indicates the static load on the bearing.

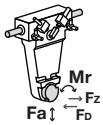

Fa [N]	2400
Mr [Nm]	20
FD [N]*	1200
FZ [N]*	630

▶ INCLUDED IN DELIVERY

2 [piece]
Mounting block
KB8K-02

2 [piece]
Flow Control Valves - with Swivel joint
DRVM5X4

▶ RECOMMENDED ACCESSORIES

ENERGY SUPPLY

DSV1-8
Pressure safety valve

DSV1-8E
Pressure safety valve with quick exhaust

SENSORS

NJ8-E2
Inductive proximity switch - Cable 5 m

NJ8-E2S
Inductive proximity switch – M8

CONNECTIONS / OTHER

KAG500
Plug-in connector Straight Cable 5m - female connector M8

KAW500
Plug-in connector Angled Cable 5m - female connector M8

S8-G-3
Plug-in connector customizable Straight - male connector M8

S12-G-3
Plug-in connector customizable Straight - male connector M12

	► Technical data		
Order no.	**SB74-90-C**	**SB74-180-C**	**SB74G**
Swivel angle [°]	90	180	
Torque per jaw [Nm]	3.5	3.5	
Swivel angle regulable +/- [°]	3	3	
Repetition accuracy +/- [°]	0.01	0.01	
Operating pressure min. [bar]	3	3	
Operating pressure max. [bar]	8	8	
Nominal operating pressure [bar]	6	6	6
Operating temperature min. [°C]	5	5	5
Operating temperature max. [°C]	+80	+80	+80
Air volume per cycle [cm³]	16	21	
Certifications	LABS / REACH / RoHS	LABS / REACH / RoHS	LABS / REACH / RoHS
Protection to IEC 60529	IP54	IP54	IP54
Weight [kg]	1.7	1.7	1.1
FD [N]*	1200	1200	1200
FZ [N]*	630	630	630

*Observe the gripper force

SB74-90-C
SB74-180-C

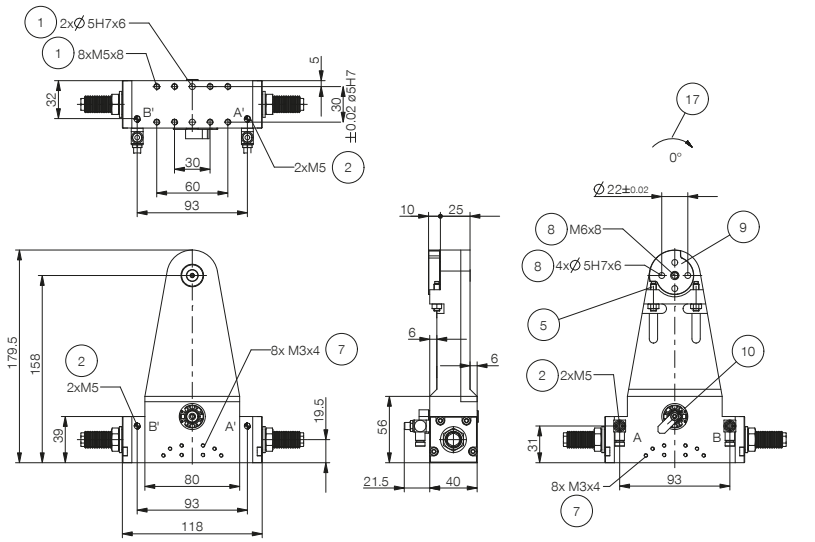

1 Fixings for swivel unit
2 Energy supply
5 Adjusting screw
7 Attachment for mounting block
8 Fixing tool side
9 Fix stop 90° or 180°
10 Switch cam 90° or 180°
17 Direction of rotation
A Air connection swivel to 90° or 180°
B Air connection swivel (0°)
A' Alternate air connection swivel to 90° or 180°
B' Alternate air connection swivel (0°)

SB74G

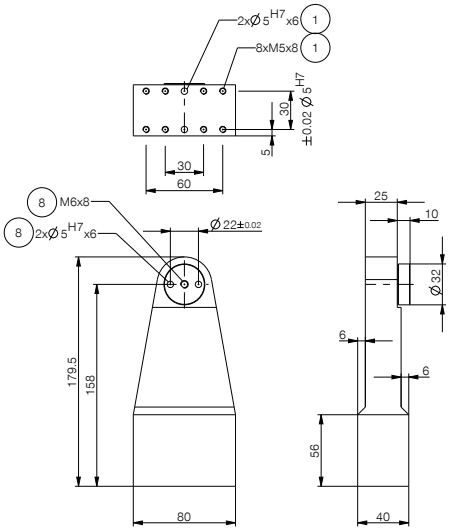

SWIVEL JAWS
SERIES SBZ FUNCTIONAL DESCRIPTION

ENERGY SUPPLY

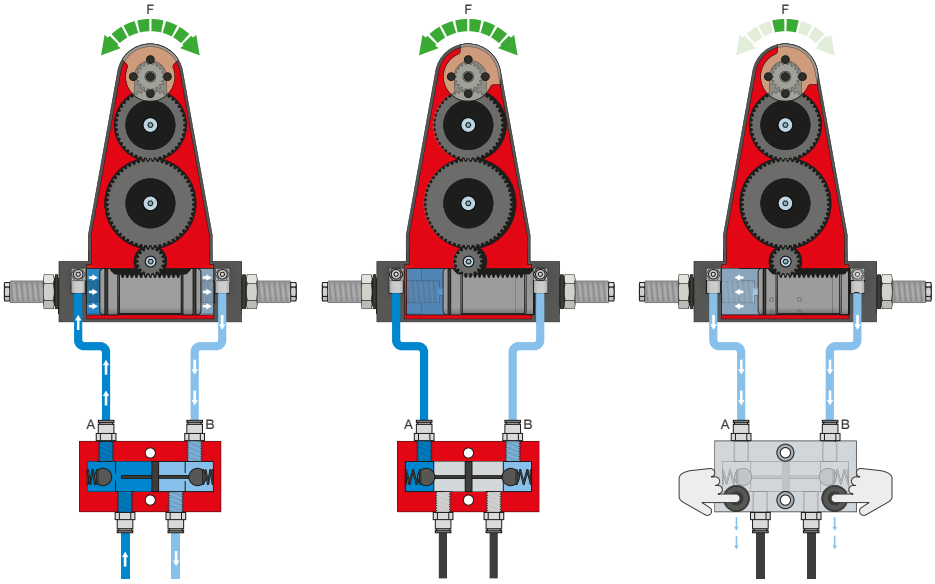

Pressure safety valve – DSV

Ensures safe retention of force and position if the system pressure drops

The integrated double check valve, which can be unlocked, retains the system pressure of the swivel jaw in case of EMERGENCY STOP. To ensure the function, the valve must be installed as close to the swivel jaw's air connection as possible. In variant E, two pushbuttons are installed that allow for controlled bleeding of the swivel jaw.

SENSORS

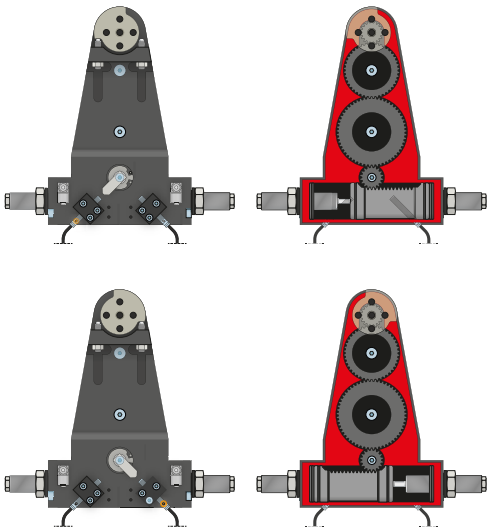

Inductive sensors – NJ

The sensor is inserted into the mounting block as far as it will go and secured. Tuning to the desired position then takes place by adjusting the cam switch. The sensors are available in versions with 5 m cables with exposed leads and 0,3 m cable with male connector, as well as with direct male connector orientation.

CONNECTIONS / OTHER

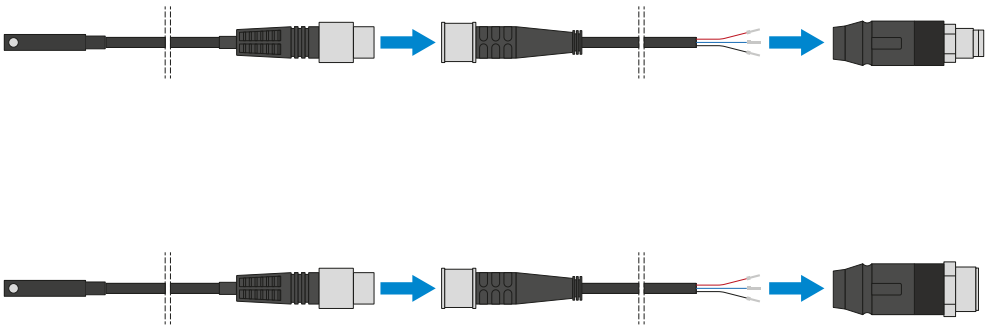

Plug-in connectors

For extending and fabricating the connection lines for the sensors

Cables with a length of 5 m with exposed leads are available. Depending on the specific needs, the cables can be shortened or fabricated with connectors in sizes M8 and M12.