ANGLE PIVOT UNITS
SERIES SW

▶ PRODUCT ADVANTAGES

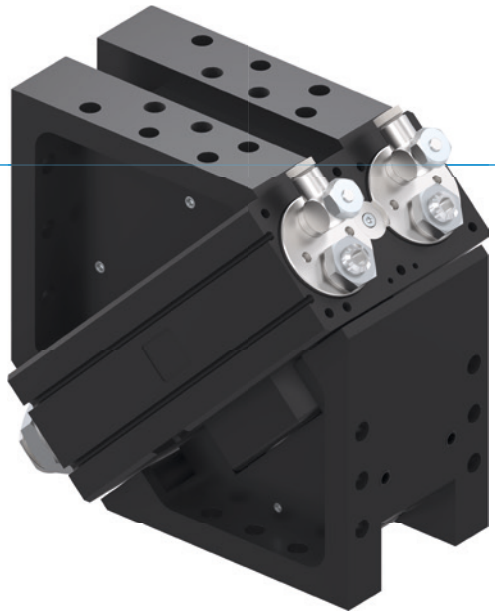

“The superior”

- **Up to 100% more performance than the benchmark**

  Superior end position damping lets you swivel more mass in the shortest amount of time, increasing your machine’s component output

- **Includes two angle flanges**

  Reduce your design and manufacturing efforts with the angle pivot unit aligned on the machine loading system

- **More than 100% higher radial bearing load than the benchmark**

  The generously scaled bearings stand for robustness and long service life and provide the highest process reliability for your application

▶ SERIES CHARACTERISTICS

Installation size	Version
SWXXX	DX
10 million maintenance-free cycles (max.)	●
IP64	●
Inductive sensor	●
Magnetic field sensor	●
Flange	●
Powerstop end position damping	●
End positions adjustable +/- 3	●
Positionability - 2 positions	●
Rotation angle 180°	●
Fluid feed-through	●

▶ BENEFITS IN DETAIL

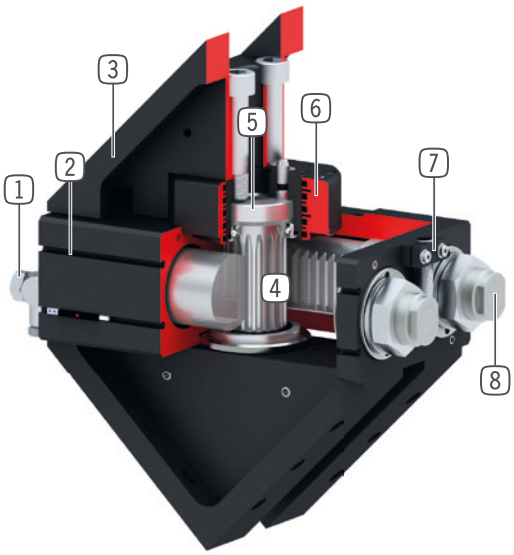

1 **Air flow control valve**
- for speed regulation (included in the delivery)

2 **Sensing slot**
- mounting and positioning of magnetic field sensors

3 **Robust, lightweight housing**
- Hard-coated aluminum alloy

4 **Force transfer**
- rack and pinion

5 **Two way ball bearing hollow shaft**
- for feedthrough cables and hoses
- high forces and moments capacity

6 **Up to 8 way integrated air feed-through**
- for hoseless air transfer
- hose package does not have to be pivoted

7 **Mounting block**
- mounting for inductive proximity switch

8 **Integrated and patented hydraulic shock absorbers**
- adjustable end position damping
- heating is prevented through installation in pneumatic pressure chamber

▶ TECHNICAL DATA

Installation size	Swivel angle [°]	Torque [Nm]	Weight [kg]	IP class
SW50	180	1.5	1.3	IP64
SW74	180	5.5	3	IP64
SW100	180	15	6.8	IP64
SW125	180	34	17	IP64
SW155	180	58	27	IP64
SW195	180	120	50	IP64

▶ FURTHER INFORMATION IS AVAILABLE ONLINE

All information just a click away at: www.zimmer-group.com. Find data, illustrations, 3D models and operating instructions for your installation size using the order number for your desired product. Quick, clear and always up-to-date.

ANGLE PIVOT UNITS
INSTALLATION SIZE SW155

▶ PRODUCT SPECIFICATIONS

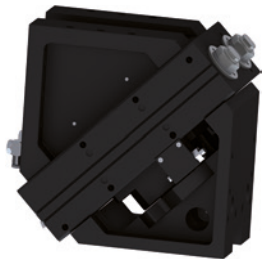

▶ INCLUDED IN DELIVERY

2 [piece]
Flow Control Valves - with Swivel joint
DRV1-4X8

4 [piece]
O-Ring
COR0090150

▶ RECOMMENDED ACCESSORIES

ENERGY SUPPLY

DSV1-8
Pressure safety valve

DSV1-8E
Pressure safety valve with quick exhaust

SENSORS

NJ8-E2
Inductive proximity switch - Cable 5 m

MFS02-K-KHC-P1-PNP
Magnetic field sensor straight, cable 5 m

MFS02-S-KHC-P1-PNP
Magnetic field sensor straight, cable 0.3 m - M8 connector

CONNECTIONS / OTHER

KAG500
Plug-in connector Straight Cable 5m - female connector M8

KAW500
Plug-in connector Angled Cable 5m - female connector M8

S8-G-3
Plug-in connector customizable Straight - male connector M8

S12-G-3
Plug-in connector customizable Straight - male connector M12

	► Technical data
Order no.	**SW155D4-C**
Swivel angle [°]	180
Torque [Nm]	58
Swivel time [s]*	0.8
Passage bore Ø [mm]	40
Pneumatic energy transfer [Quantity]	4
Axial bearing load [N]	5900
Radial bearing load [Nm]	760
Repetition accuracy +/- [°]	0.01
Operating pressure min. [bar]	3
Operating pressure max. [bar]	8
Nominal operating pressure [bar]	6
Operating temperature min. [°C]	5
Operating temperature max. [°C]	+80
Air volume per cycle [cm³]	730
Certifications	LABS / REACH / RoHS
Protection to IEC 60529	IP64
Weight [kg]	27

*without extension load

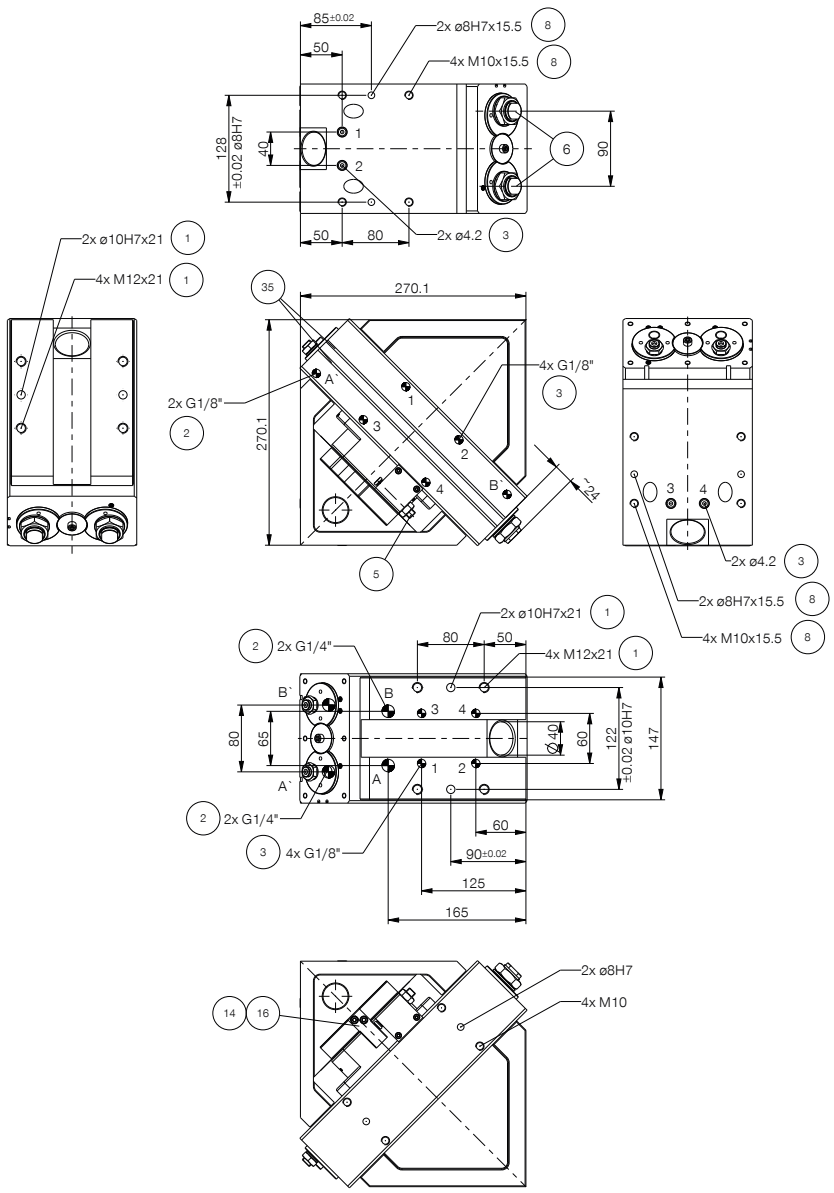

1. Fixings for swivel unit
2. Energy supply
3. Integrated air feed-through
5. Adjusting screw
6. Shock absorber
8. Fixing tool side
14. Switch cam 180°
16. Fix stop 180°
35. Integrated slot for magnetic field sensor
38. Adapter
39. Swivel unit
A. Air connection 180°
B. Air connection 0°
A'. Alternate air connection (180°)
B'. Alternate air connection (0°)

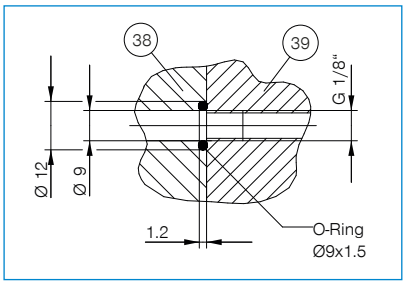

Hoseless energy supply (machine)

ANGLE PIVOT UNITS
SERIES SW FUNCTIONAL DESCRIPTION

ENERGY SUPPLY

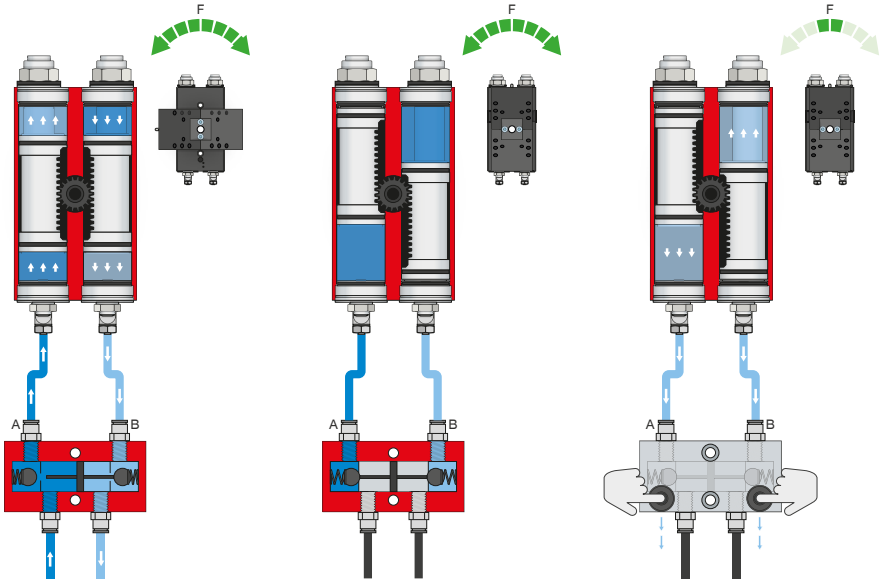

Pressure safety valve – DSV

Ensures safe retention of force and position if the system pressure drops

The integrated double check valve, which can be unlocked, retains the system pressure of the swivel unit in case of EMERGENCY STOP. To ensure the function, the valve must be installed as close to the swivel unit's air connection as possible. In variant E, two pushbuttons are installed that allow for controlled bleeding of the swivel unit.

SENSORS

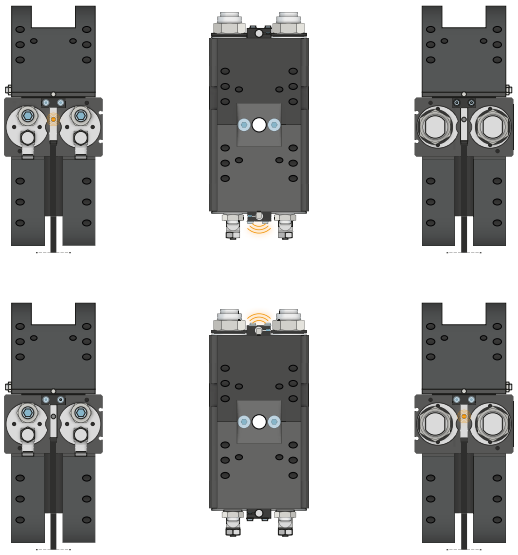

Inductive sensors – NJ

The sensor is inserted into the mounting block as far as it will go and secured. Tuning to the desired position then takes place by adjusting the cam switch. The sensors are available in versions with 5 m cables with exposed leads and 0,3 m cable with male connector, as well as with direct male connector orientation.

SENSORS

MFS02

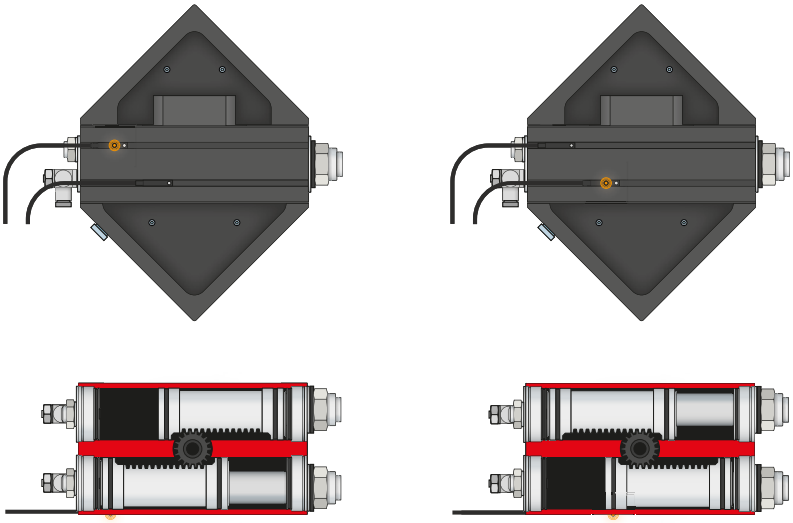

1-point magnetic field sensors – MFS

For non-contact sensing of the piston position

These sensors are clamped in the C-groove of the swivel unit and detect the magnet attached to the piston of the swivel unit. To ensure use in a wide variety of space conditions, the sensors are available in two versions. While the horizontal MFS02, with straight cable outlet, disappears into the C-groove of the swivel unit almost completely, the vertical MFS01 is taller, but has a cable outlet that is offset at an angle of 90°. The variants are available in versions with 5 m cables with exposed leads and 0,3 m cable with connector.

CONNECTIONS / OTHER

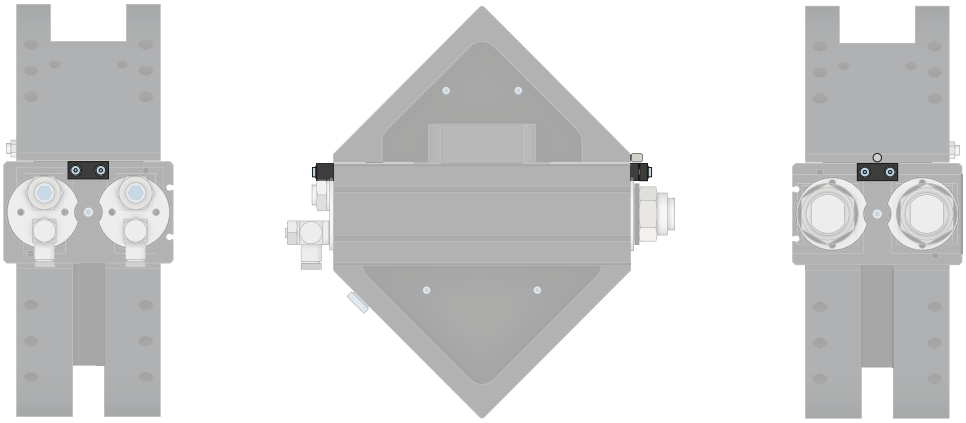

Attachment kit

The attachment kit is installed on the gripper using the fastening material included in the scope of delivery. The attachment kit enables sensing of the gripper positions via inductive proximity switches.

ANGLE PIVOT UNITS
SERIES SW FUNCTIONAL DESCRIPTION

CONNECTIONS / OTHER

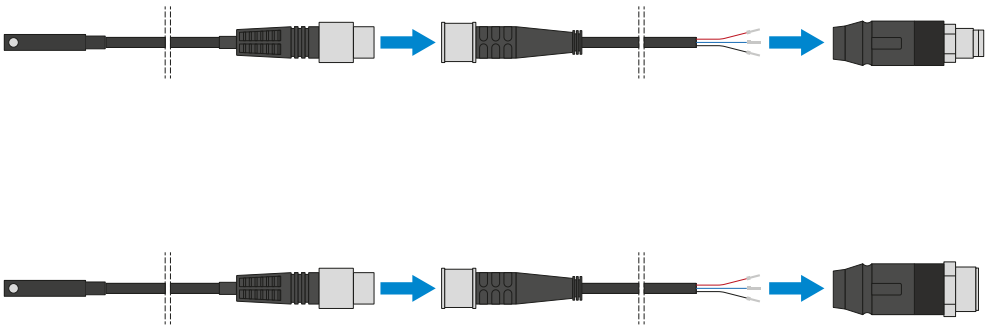

Plug-in connectors

For extending and fabricating the connection lines for the sensors

Cables with a length of 5 m with exposed leads are available. Depending on the specific needs, the cables can be shortened or fabricated with connectors in sizes M8 and M12.