AXIS COMPENSATION MODULES
SERIES XYR1000

▶ PRODUCT ADVANTAGES

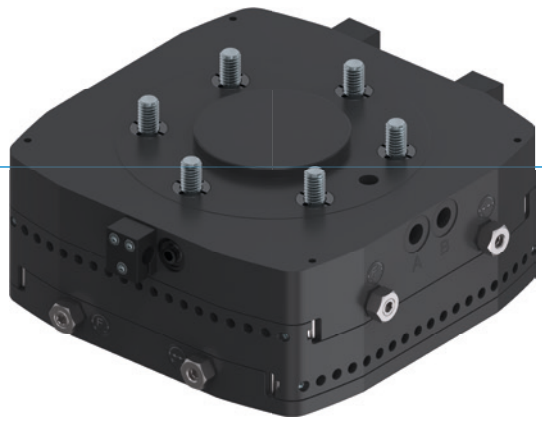

▶ **Adjustable balancing force and stroke**

Using adjusting screws, you can adjust the properties of the equalizer optimally to your application in the shortest amount of time

▶ **Flat design**

This structure reduces the moment load for your robot to a minimum and makes it possible to use smaller and more affordable sizes

▶ **Can be fixed in place centrally or de-centrally**

Depending on the requirement, you can clamp or centrally lock the equalizer position. An aid for optimal processes

▶ THE BEST PRODUCT FOR YOUR APPLICATION

▶ **Our products welcome the challenge!**
Extreme conditions, all over the world—our tried and tested components and systems give you endless possibilities.
Find the best product for your specific use:
www.zimmer-group.com

▶ BENEFITS IN DETAIL

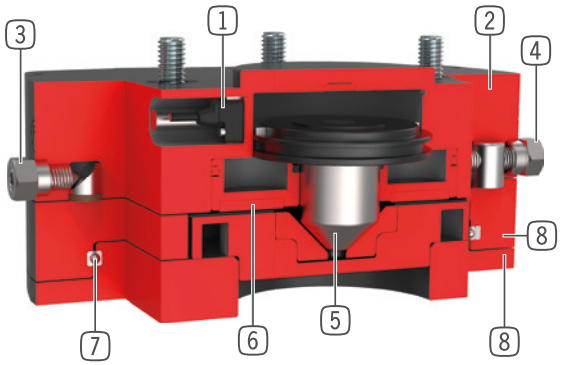

1 **Piston position sensing**
- via magnetic field sensor
- available as an accessory

2 **Robust, lightweight housing**
- Hard-coated aluminum alloy
- partial mounting circle in accordance with EN ISO 9409-1
- lowest overall height

3 **Compensation force**
- adjustable via adjustment screw

4 **Compensation stroke**
- infinitely variable (from size 1063 upwards)

5 **Locking piston**
- centrical via cone

6 **Eccentrical locking**
- via pneumatic piston with frictional contact

7 **Linear guide**
- for highest force and moments capacity

8 **Compensation plate**
- to balance position errors in XY- direction

▶ TECHNICAL DATA

Installation size	Connecting flange according EN ISO 9409-1	Stroke X/Y level +/- [mm]	Retention force centred [N]	Retention force decentred [N]
XYR1040	TK 40	3.0	150	30
XYR1050	TK 50	3.5	250	50
XYR1063	TK 63	4.5	400	125
XYR1080	TK 80	5.5	600	250
XYR1100	TK 100	6.0	900	450
XYR1125	TK 125	8.0	1500	600
XYR1160	TK 160	10.0	2000	1000
XYR1200	TK 200	12.5	3000	1250

▶ FURTHER INFORMATION IS AVAILABLE ONLINE

All information just a click away at: www.zimmer-group.com. Find data, illustrations, 3D models and operating instructions for your installation size using the order number for your desired product. Quick, clear and always up-to-date.

AXIS COMPENSATION MODULES
INSTALLATION SIZE XYR1040

▶ PRODUCT SPECIFICATIONS

▶ Vertical design with centered holding force

Shows the maximum handling weight as a function of acceleration and lever arm with centric setup below the product. Does not replace the technical design.

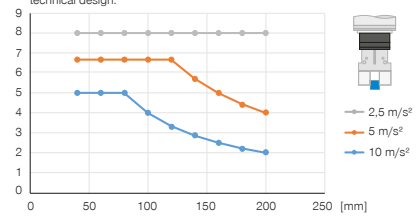

▶ Vertical design with decentered holding force

Shows the maximum handling weight as a function of acceleration and lever arm with centric setup below the product. Does not replace the technical design.

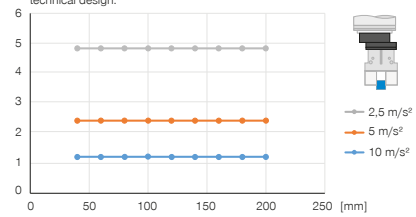

▶ Forces and moments

Shows the maximum forces and moments that may act on the axle balance.

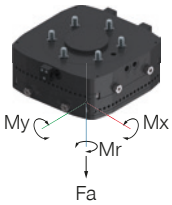

Mr [Nm]	10
Mx [Nm]	10
My [Nm]	10
Fa [N]	250

▶ Horizontal design with centered holding force

Shows the maximum handling weight as a function of acceleration and lever arm with centric setup below the product. Does not replace the technical design.

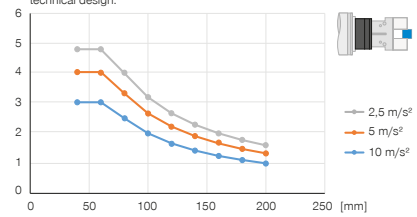

▶ Horizontal design with decentered holding force

Shows the maximum handling weight as a function of acceleration and lever arm with centric setup below the product. Does not replace the technical design.

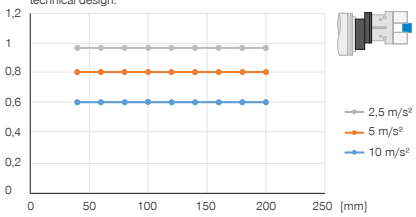

▶ INCLUDED IN DELIVERY

4 [piece]
Cylinder Screw
C7984060149

▶ RECOMMENDED ACCESSORIES

ENERGY SUPPLY

GVM5
Straight Fittings - Quick Connect Style

WVM5
Angled Fittings - Quick Connect Style

SENSORS

ZUB109817
Piston position sensing

	► Technical data
Order no.	**XYR1040-B**
Connecting flange according EN ISO 9409-1	TK 40
Stroke X/Y level +/- [mm]	3.0
Retention force centred [N]	150
Retention force decentred [N]	30
Repetition accuracy +/- [mm]	0.02
Operating pressure [bar]	1 ... 8
Nominal operating pressure [bar]	6
Operating temperature [°C]	5 ... +80
Air volume per cycle centred [cm³]	6
Air volume per cycle decentred [cm³]	3
Moment of inertia [kgcm²]	3.4
Certifications	LABS / REACH / RoHS
Weight [kg]	0.5

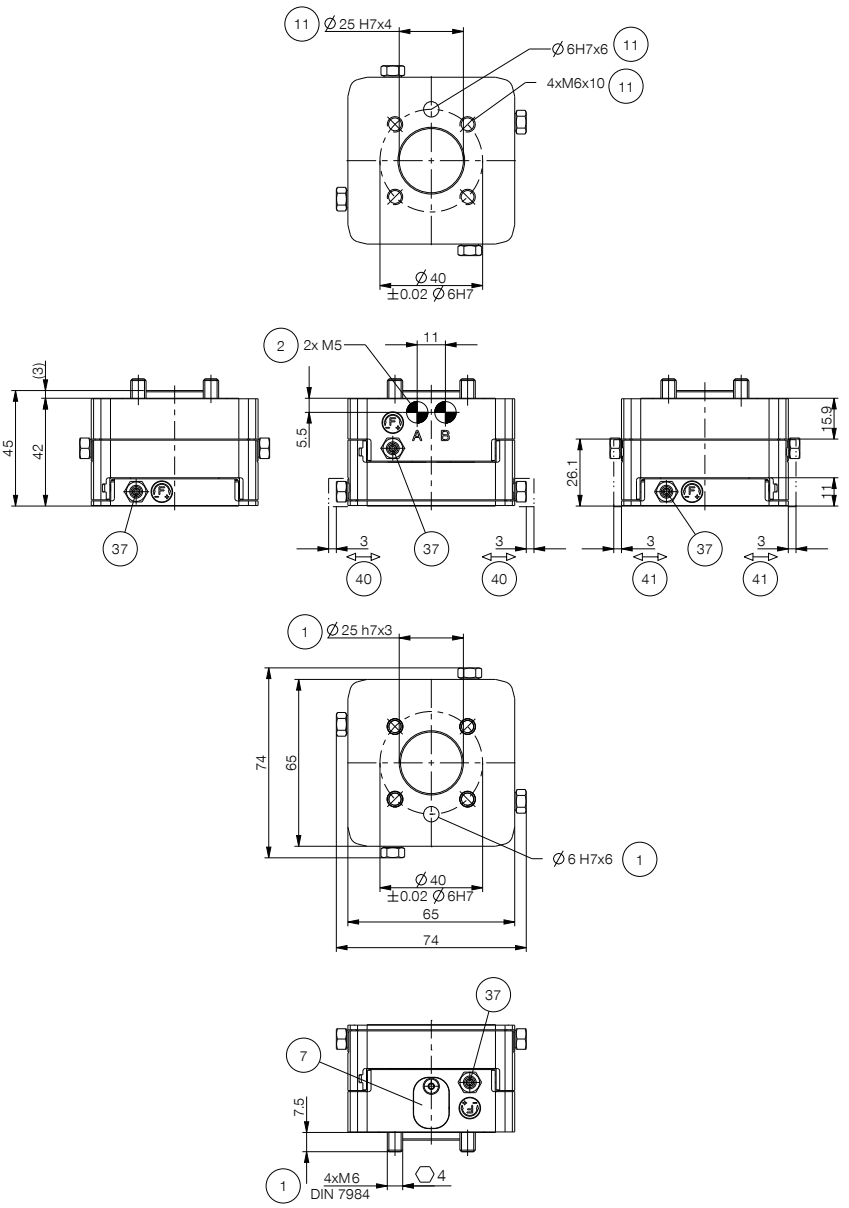

1 Fixing (robot side)
2 Energy supply
7 Piston sensing
11 Fixing tool side
37 Adjusting srew stopper
39 Fixing sensor bracket
40 Stroke X
41 Stroke Y
A Locking piston locked, eccentric clamping deactivated
B Locking piston unlocked, eccentric clamping activated