# VACUUM GRIPPING SYSTEM
## SERIES ZGA

## ▶ PRODUCT ADVANTAGES

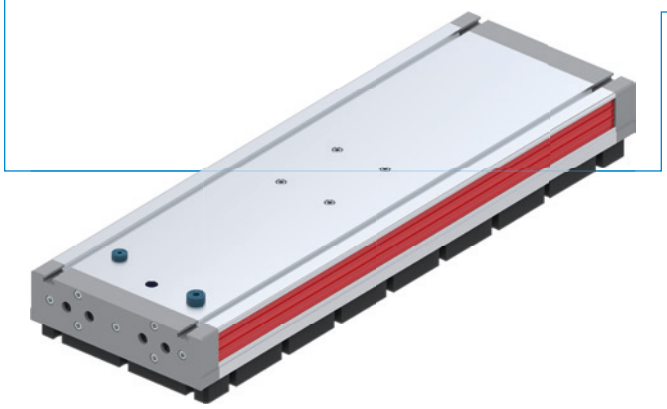

### ▶ Versatile applicability

The series ZGA is suitable for a wide variety of workpieces and surfaces and can be flexibly adapted to different applications.

### ▶ Reliable gripping

The integrated valve technology ensures that the holding force remains reliable even with workpieces of varying sizes and gripping surfaces that are partially covered.

### ▶ Flexible configuration

Thanks to a variety of models and configuration options, the series ZGA can be customized to meet the specific needs of each application.

### ▶ Certifications: LABS / REACH / RoHS

## ▶ PRODUCT KEY

| ZGA | 200X300 | - | 34 | - | FS2 | - | N |
|---|---|---|---|---|---|---|---|
| Series | Dimensions | | Levels and number of vacuum cartridges | | Valve technology and hole pattern | | Air and blow-off control valve, sensor |

## ▶ DIAGRAMS

**ZGA80**

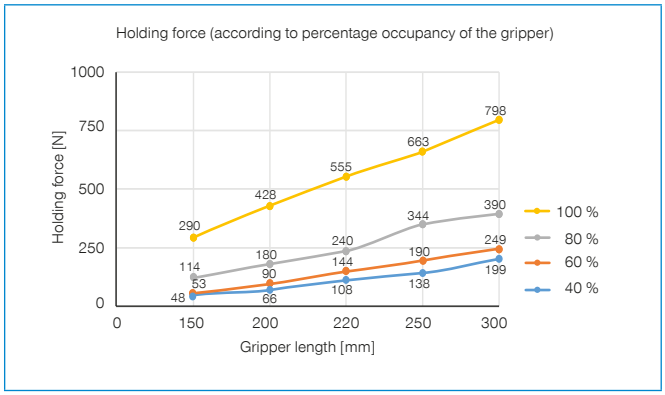


**ZGA130**

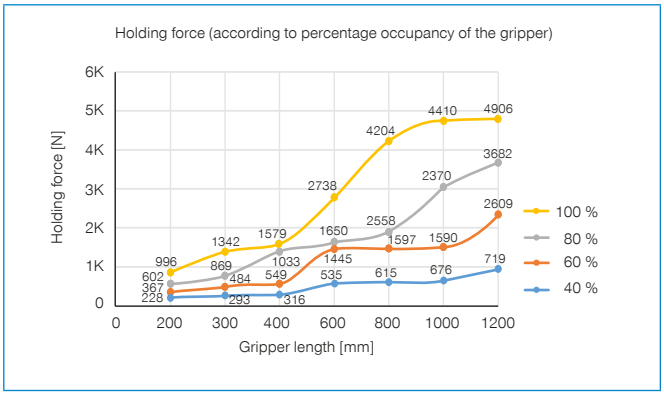


**ZGA200**

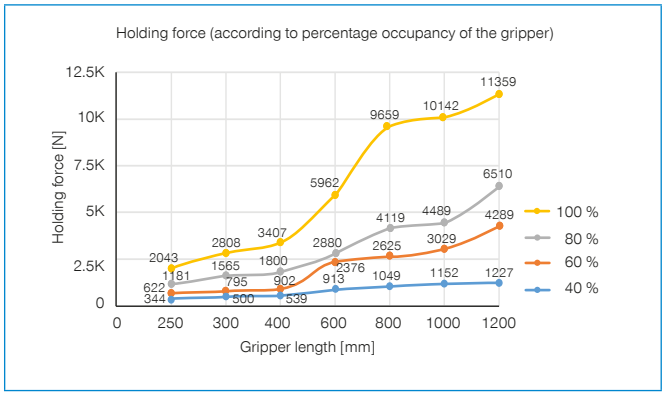


**ZGA300**

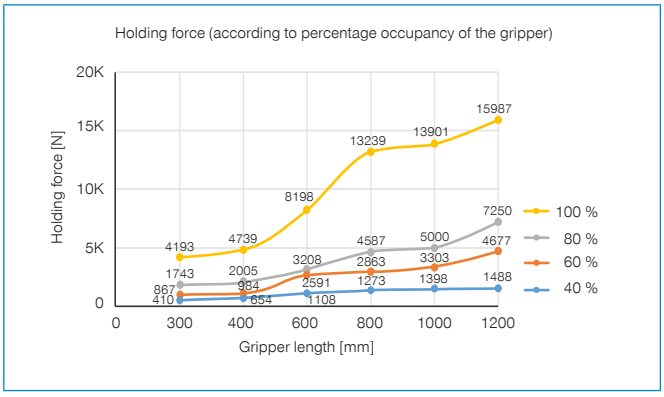

## ▶ TECHNICAL DRAWINGS

### ZGA80

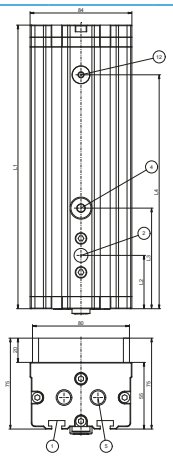

### ZGA80 with accessories

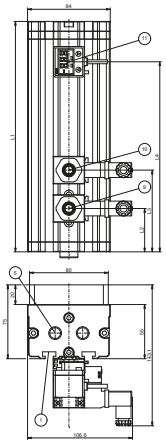

① Fixing

② Pneumatic connection

④ Blow-off connection

⑤ Exhaust air/exhaust air valve

⑨ Air control valve

⑩ Blow-off control valve

⑪ Vacuum switch

⑫ Vacuum switch connection

| Model | L1 [mm] | L2 [mm] | L3 [mm] | L4 [mm] |
|---|---|---|---|---|
| **ZGA80X150** | 164 | 30 | 136 | 0 |
| **ZGA80X200** | 214 | 80 | 121 | 186 |
| **ZGA80X220** | 234 | 44 | 83 | 193 |
| **ZGA80X250** | 264 | 72 | 34 | 222 |
| **ZGA80X300** | 314 | 42 | 80 | 272 |

### ZGA130

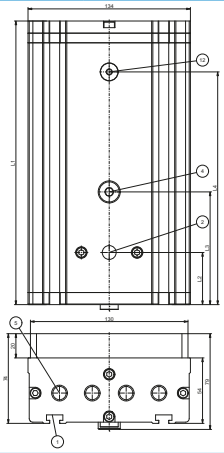

### ZGA130 with accessories

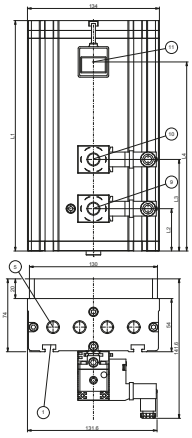

① Fixing

② Pneumatic connection

④ Blow-off connection

⑤ Exhaust air/exhaust air valve

⑨ Air control valve

⑩ Blow-off control valve

⑪ Vacuum switch

⑫ Vacuum switch connection

| Model | L1 [mm] | L2 [mm] | L3 [mm] | L4 [mm] |
|---|---|---|---|---|
| **ZGA130X220** | 234 | 43 | 93 | 192 |
| **ZGA130X300** | 314 | 43 | 93 | 272 |
| **ZGA130X400** | 414 | 143 | 93 | 372 |
| **ZGA130X600** | 621 | 350 | 400 | 579 |
| **ZGA130X800** | 822 | 551 | 601 | 780 |
| **ZGA130X1000** | 1022 | 751 | 801 | 980 |
| **ZGA130X1200** | 1222 | 951 | 1001 | 1180 |

# VACUUM GRIPPING SYSTEM
## SERIES ZGA

### ZGA200

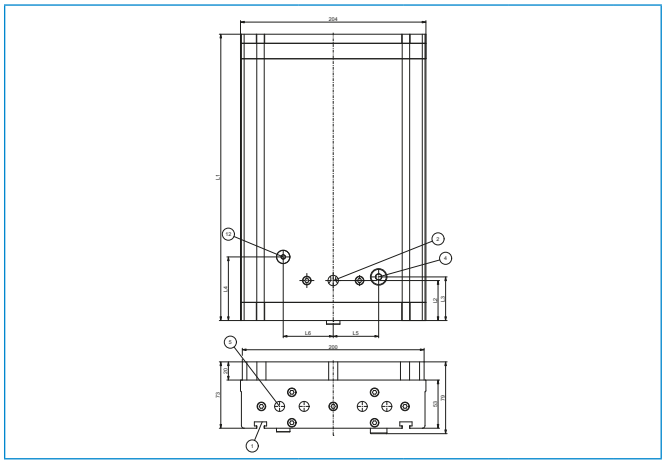

### ZGA200 with accessories

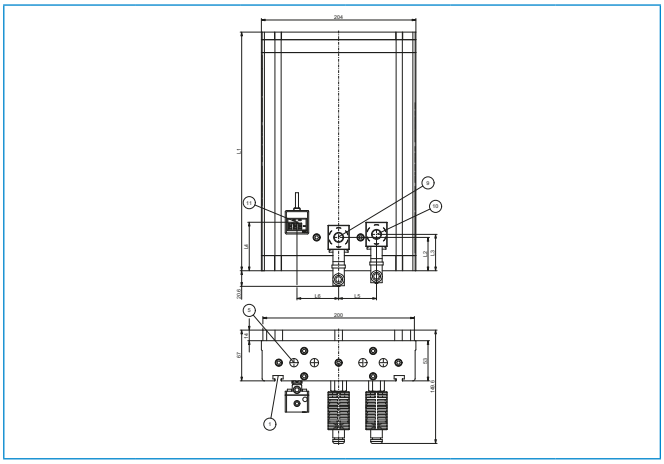

① Fixing

② Pneumatic connection

④ Blow-off connection

⑤ Exhaust air/exhaust air valve

⑨ Air control valve

⑩ Blow-off control valve

⑪ Vacuum switch

⑫ Vacuum switch connection

| Model | L1 [mm] | L2 [mm] | L3 [mm] | L4 [mm] | L5 [mm] | L6 [mm] |
|---|---|---|---|---|---|---|
| **ZGA200X300** | 315 | 44 | 48 | 64 | 50 | 55 |
| **ZGA200X400** | 415 | 44 | 48 | 70 | 50 | 55 |
| **ZGA200X600** | 622 | 51 | 55 | 71 | 55 | 55 |
| **ZGA200X800** | 822 | 51 | 55 | 77 | 55 | 55 |
| **ZGA200X1000** | 1022 | 51 | 77 | 77 | 55 | 55 |
| **ZGA200X1200** | 1222 | 51 | 77 | 77 | 55 | 55 |

### ZGA300

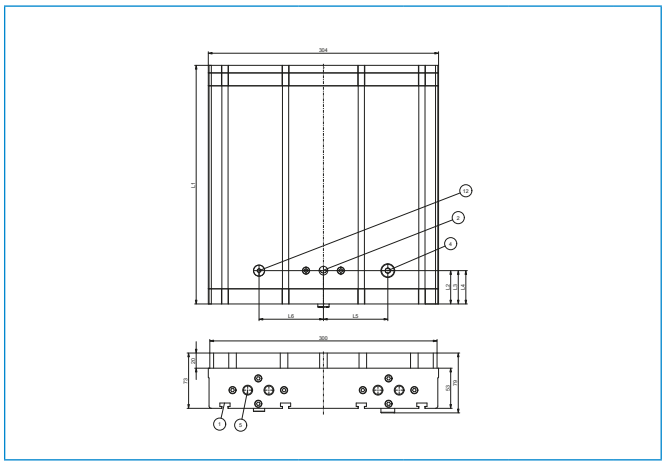

### ZGA300 with accessories

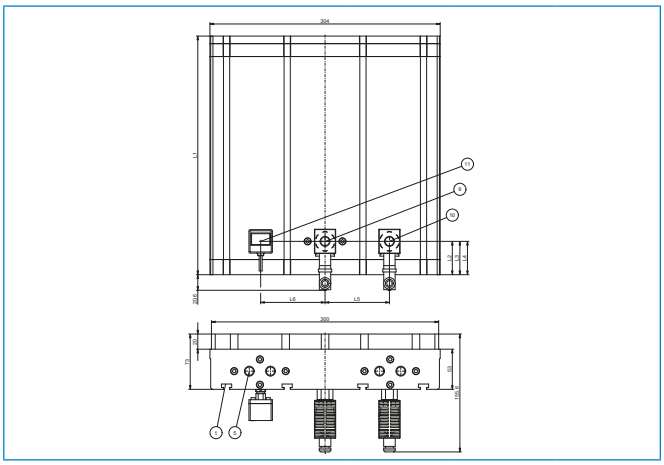

① Fixing

② Pneumatic connection

④ Blow-off connection

⑤ Exhaust air/exhaust air valve

⑨ Air control valve

⑩ Blow-off control valve

⑪ Vacuum switch

⑫ Vacuum switch connection

| Model | L1 [mm] | L2 [mm] | L3 [mm] | L4 [mm] | L5 [mm] | L6 [mm] |
|---|---|---|---|---|---|---|
| **ZGA300X300** | 315 | 44 | 44 | 44 | 85 | 85 |
| **ZGA300X400** | 415 | 44 | 44 | 44 | 85 | 85 |
| **ZGA300X600** | 622 | 51 | 51 | 51 | 86 | 86 |
| **ZGA300X800** | 822 | 51 | 51 | 51 | 86 | 86 |
| **ZGA300X1000** | 1022 | 51 | 51 | 51 | 86 | 86 |
| **ZGA300X1200** | 1222 | 51 | 51 | 51 | 86 | 86 |

## ▶ TECHNICAL DATA

| | ▶ Technical data | | | | | | | | |
|---|---|---|---|---|---|---|---|---|---|
| Order no. | Max. vacuum level [kPa] | Volume flow [l/min] | Air consumption at 4 bar [l/min] | Air consumption at 6 bar [l/min] | Hole pattern of the sealing element | Air control valve | Blow-off control valve | Valve type of the area gripper | Weight [kg] |
| ZGA80X150-32-CL2 | -85 | 171 | 64 | | Round Ø 12 | No | No | Non-return valve | 1 |
| ZGA80X150-32-CL2-N | -85 | 171 | 64 | | Round Ø 12 | Yes | Yes | Non-return valve | 1 |
| ZGA80X150-32-CL2-P | -85 | 171 | 64 | | Round Ø 12 | Yes | Yes | Non-return valve | 1 |
| ZGA80X150-32-FL2 | -85 | 171 | 64 | | Round Ø 12 | No | No | Flow resistance | 1 |
| ZGA80X150-32-FL2-N | -85 | 171 | 64 | | Round Ø 12 | Yes | Yes | Flow resistance | 1 |
| ZGA80X150-32-FL2-P | -85 | 171 | 64 | | Round Ø 12 | Yes | Yes | Flow resistance | 1 |
| ZGA80X150-32-FS2 | -85 | 171 | 64 | | Round Ø 12 | No | No | Flow resistance | 1 |
| ZGA80X150-32-FS2-N | -85 | 171 | 64 | | Round Ø 12 | Yes | Yes | Flow resistance | 1 |
| ZGA80X150-32-FS2-P | -85 | 171 | 64 | | Round Ø 12 | Yes | Yes | Flow resistance | 1 |
| ZGA80X200-32-CL2 | -85 | 171 | | 208 | Round Ø 12 | No | No | Non-return valve | 1.4 |
| ZGA80X200-32-CL2-N | -85 | 171 | | 208 | Round Ø 12 | Yes | Yes | Non-return valve | 1.4 |
| ZGA80X200-32-CL2-P | -85 | 171 | | 208 | Round Ø 12 | Yes | Yes | Non-return valve | 1.7 |
| ZGA80X200-32-FL2 | -85 | 171 | | 208 | Round Ø 12 | No | No | Flow resistance | 1.4 |
| ZGA80X200-32-FL2-N | -85 | 171 | | 208 | Round Ø 12 | Yes | Yes | Flow resistance | 1.7 |
| ZGA80X200-32-FL2-P | -85 | 171 | | 208 | Round Ø 12 | Yes | Yes | Flow resistance | 1.7 |
| ZGA80X200-32-FS2 | -85 | 171 | | 208 | Round Ø 12 | No | No | Flow resistance | 1.4 |
| ZGA80X200-32-FS2-N | -85 | 171 | | 208 | Round Ø 12 | Yes | Yes | Flow resistance | 1.7 |
| ZGA80X200-32-FS2-P | -85 | 171 | | 208 | Round Ø 12 | Yes | Yes | Flow resistance | 1.7 |
| ZGA80X220-22-CL2 | -75 | 400 | | 208 | Round Ø 12 | No | No | Non-return valve | 1.5 |
| ZGA80X220-22-CL2-N | -75 | 400 | | 208 | Round Ø 12 | Yes | Yes | Non-return valve | 1.5 |
| ZGA80X220-22-CL2-P | -75 | 400 | | 208 | Round Ø 12 | Yes | Yes | Non-return valve | 1.5 |
| ZGA80X220-22-FL2 | -75 | 400 | | 208 | Round Ø 12 | No | No | Flow resistance | 1.5 |
| ZGA80X220-22-FL2-N | -75 | 400 | | 208 | Round Ø 12 | Yes | Yes | Flow resistance | 1.5 |
| ZGA80X220-22-FL2-P | -75 | 400 | | 208 | Round Ø 12 | Yes | Yes | Flow resistance | 1.5 |
| ZGA80X220-22-FS2 | -75 | 400 | | 208 | Round Ø 12 | No | No | Flow resistance | 1.5 |
| ZGA80X220-22-FS2-N | -75 | 400 | | 208 | Round Ø 12 | Yes | Yes | Flow resistance | 1.5 |
| ZGA80X220-22-FS2-P | -75 | 400 | | 208 | Round Ø 12 | Yes | Yes | Flow resistance | 1.5 |
| ZGA80X250-22-CL2 | -75 | 400 | | 208 | Round Ø 12 | No | No | Non-return valve | 1.6 |
| ZGA80X250-22-CL2-N | -75 | 400 | | 208 | Round Ø 12 | Yes | Yes | Non-return valve | 1.6 |
| ZGA80X250-22-CL2-P | -75 | 400 | | 208 | Round Ø 12 | Yes | Yes | Non-return valve | 1.6 |
| ZGA80X250-22-FL2 | -75 | 400 | | 208 | Round Ø 12 | No | No | Flow resistance | 1.6 |
| ZGA80X250-22-FL2-N | -75 | 400 | | 208 | Round Ø 12 | Yes | Yes | Flow resistance | 1.6 |
| ZGA80X250-22-FL2-P | -75 | 400 | | 208 | Round Ø 12 | Yes | Yes | Flow resistance | 1.6 |
| ZGA80X250-22-FS2 | -75 | 400 | | 208 | Round Ø 12 | No | No | Flow resistance | 1.6 |
| ZGA80X250-22-FS2-N | -75 | 400 | | 208 | Round Ø 12 | Yes | Yes | Flow resistance | 1.6 |
| ZGA80X250-22-FS2-P | -75 | 400 | | 208 | Round Ø 12 | Yes | Yes | Flow resistance | 1.6 |
| ZGA80X300-32-CL2 | -75 | 724 | | 208 | Round Ø 12 | No | No | Non-return valve | 1.8 |
| ZGA80X300-32-CL2-N | -75 | 724 | | 208 | Round Ø 12 | Yes | Yes | Non-return valve | 1.8 |
| ZGA80X300-32-CL2-P | -75 | 724 | | 208 | Round Ø 12 | Yes | Yes | Non-return valve | 1.8 |
| ZGA80X300-32-FL2 | -75 | 724 | | 208 | Round Ø 12 | No | No | Flow resistance | 1.8 |
| ZGA80X300-32-FL2-N | -75 | 724 | | 208 | Round Ø 12 | Yes | Yes | Flow resistance | 1.8 |
| ZGA80X300-32-FL2-P | -75 | 724 | | 208 | Round Ø 12 | Yes | Yes | Flow resistance | 1.8 |
| ZGA80X300-32-FS2 | -75 | 724 | | 208 | Round Ø 12 | No | No | Flow resistance | 1.8 |
| ZGA80X300-32-FS2-N | -75 | 724 | | 208 | Round Ø 12 | Yes | Yes | Flow resistance | 1.8 |
| ZGA80X300-32-FS2-P | -75 | 724 | | 208 | Round Ø 12 | Yes | Yes | Flow resistance | 1.8 |
| ZGA130X220-24-CL2 | -75 | 800 | | 416 | Round Ø 12 | No | No | Non-return valve | 1.8 |
| ZGA130X220-24-CL2-N | -75 | 800 | | 416 | Round Ø 12 | Yes | Yes | Non-return valve | 1.8 |
| ZGA130X220-24-CL2-P | -75 | 800 | | 416 | Round Ø 12 | Yes | Yes | Non-return valve | 1.8 |
| ZGA130X220-24-FL2 | -75 | 800 | | 416 | Round Ø 12 | No | No | Flow resistance | 1.8 |
| ZGA130X220-24-FL2-N | -75 | 800 | | 416 | Round Ø 12 | Yes | Yes | Flow resistance | 1.8 |
| ZGA130X220-24-FL2-P | -75 | 800 | | 416 | Round Ø 12 | Yes | Yes | Flow resistance | 1.8 |
| ZGA130X220-24-FS2 | -75 | 800 | | 416 | Round Ø 12 | No | No | Flow resistance | 1.8 |
| ZGA130X220-24-FS2-N | -75 | 800 | | 416 | Round Ø 12 | Yes | Yes | Flow resistance | 1.8 |
| ZGA130X220-24-FS2-P | -75 | 800 | | 416 | Round Ø 12 | Yes | Yes | Flow resistance | 1.8 |
| ZGA130X300-34-CL2 | -75 | 1448 | | 416 | Round Ø 12 | No | No | Non-return valve | 2.6 |
| ZGA130X300-34-CL2-N | -75 | 1448 | | 416 | Round Ø 12 | Yes | Yes | Non-return valve | 2.6 |

# VACUUM GRIPPING SYSTEM
## SERIES ZGA

| Order no. | ▶ Technical data | | | | | | | | |
|---|---|---|---|---|---|---|---|---|---|
| | Max. vacuum level [kPa] | Volume flow [l/min] | Air consumption at 4 bar [l/min] | Air consumption at 6 bar [l/min] | Hole pattern of the sealing element | Air control valve | Blow-off control valve | Valve type of the area gripper | Weight [kg] |
| ZGA130X300-34-CL2-P | -75 | 1448 | | 416 | Round Ø 12 | Yes | Yes | Non-return valve | 2.6 |
| ZGA130X300-34-FL2 | -75 | 1448 | | 416 | Round Ø 12 | No | No | Flow resistance | 2.6 |
| ZGA130X300-34-FL2-N | -75 | 1448 | | 416 | Round Ø 12 | Yes | Yes | Flow resistance | 2.6 |
| ZGA130X300-34-FL2-P | -75 | 1448 | | 416 | Round Ø 12 | Yes | Yes | Flow resistance | 2.6 |
| ZGA130X300-34-FS2 | -75 | 1448 | | 416 | Round Ø 12 | No | No | Flow resistance | 2.6 |
| ZGA130X300-34-FS2-N | -75 | 1448 | | 416 | Round Ø 12 | Yes | Yes | Flow resistance | 2.6 |
| ZGA130X300-34-FS2-P | -75 | 1448 | | 416 | Round Ø 12 | Yes | Yes | Flow resistance | 2.6 |
| ZGA130X400-34-CL2 | -75 | 1448 | | 416 | Round Ø 12 | No | No | Non-return valve | 3.2 |
| ZGA130X400-34-CL2-N | -75 | 1448 | | 416 | Round Ø 12 | Yes | Yes | Non-return valve | 3.2 |
| ZGA130X400-34-CL2-P | -75 | 1448 | | 416 | Round Ø 12 | Yes | Yes | Non-return valve | 3.2 |
| ZGA130X400-34-FL2 | -75 | 1448 | | 416 | Round Ø 12 | No | No | Flow resistance | 3.2 |
| ZGA130X400-34-FL2-N | -75 | 1448 | | 416 | Round Ø 12 | Yes | Yes | Flow resistance | 3.2 |
| ZGA130X400-34-FL2-P | -75 | 1448 | | 416 | Round Ø 12 | Yes | Yes | Flow resistance | 3.2 |
| ZGA130X400-34-FS2 | -75 | 1448 | | 416 | Round Ø 12 | No | No | Flow resistance | 3.2 |
| ZGA130X400-34-FS2-N | -75 | 1448 | | 416 | Round Ø 12 | Yes | Yes | Flow resistance | 3.2 |
| ZGA130X400-34-FS2-P | -75 | 1448 | | 416 | Round Ø 12 | Yes | Yes | Flow resistance | 3.2 |
| ZGA130X600-38-CL2 | -75 | 2896 | | 832 | Round Ø 12 | No | No | Non-return valve | 5.2 |
| ZGA130X600-38-CL2-N | -75 | 2896 | | 832 | Round Ø 12 | Yes | Yes | Non-return valve | 5.2 |
| ZGA130X600-38-CL2-P | -75 | 2896 | | 832 | Round Ø 12 | Yes | Yes | Non-return valve | 5.2 |
| ZGA130X600-38-FL2 | -75 | 2896 | | 832 | Round Ø 12 | No | No | Flow resistance | 5.2 |
| ZGA130X600-38-FL2-N | -75 | 2896 | | 832 | Round Ø 12 | Yes | Yes | Flow resistance | 5.2 |
| ZGA130X600-38-FL2-P | -75 | 2896 | | 832 | Round Ø 12 | Yes | Yes | Flow resistance | 5.2 |
| ZGA130X600-38-FS2 | -75 | 2896 | | 832 | Round Ø 12 | No | No | Flow resistance | 5.2 |
| ZGA130X600-38-FS2-N | -75 | 2896 | | 832 | Round Ø 12 | Yes | Yes | Flow resistance | 5.2 |
| ZGA130X600-38-FS2-P | -75 | 2896 | | 832 | Round Ø 12 | Yes | Yes | Flow resistance | 5.2 |
| ZGA130X800-38-CL2 | -75 | 2896 | | 832 | Round Ø 12 | No | No | Non-return valve | 6.6 |
| ZGA130X800-38-CL2-N | -75 | 2896 | | 832 | Round Ø 12 | Yes | Yes | Non-return valve | 6.6 |
| ZGA130X800-38-CL2-P | -75 | 2896 | | 832 | Round Ø 12 | Yes | Yes | Non-return valve | 6.6 |
| ZGA130X800-38-FL2 | -75 | 2896 | | 832 | Round Ø 12 | No | No | Flow resistance | 6.6 |
| ZGA130X800-38-FL2-N | -75 | 2896 | | 832 | Round Ø 12 | Yes | Yes | Flow resistance | 6.6 |
| ZGA130X800-38-FL2-P | -75 | 2896 | | 832 | Round Ø 12 | Yes | Yes | Flow resistance | 6.6 |
| ZGA130X800-38-FS2 | -75 | 2896 | | 832 | Round Ø 12 | No | No | Flow resistance | 6.6 |
| ZGA130X800-38-FS2-N | -75 | 2896 | | 832 | Round Ø 12 | Yes | Yes | Flow resistance | 6.6 |
| ZGA130X800-38-FS2-P | -75 | 2896 | | 832 | Round Ø 12 | Yes | Yes | Flow resistance | 6.6 |
| ZGA130X1000-38-CL2 | -75 | 2896 | | 832 | Round Ø 12 | No | No | Non-return valve | 8.1 |
| ZGA130X1000-38-CL2-N | -75 | 2896 | | 832 | Round Ø 12 | Yes | Yes | Non-return valve | 8.1 |
| ZGA130X1000-38-CL2-P | -75 | 2896 | | 832 | Round Ø 12 | Yes | Yes | Non-return valve | 8.1 |
| ZGA130X1000-38-FL2 | -75 | 2896 | | 832 | Round Ø 12 | No | No | Flow resistance | 8.1 |
| ZGA130X1000-38-FL2-N | -75 | 2896 | | 832 | Round Ø 12 | Yes | Yes | Flow resistance | 8.1 |
| ZGA130X1000-38-FL2-P | -75 | 2896 | | 832 | Round Ø 12 | Yes | Yes | Flow resistance | 8.1 |
| ZGA130X1000-38-FS2 | -75 | 2896 | | 832 | Round Ø 12 | No | No | Flow resistance | 8.1 |
| ZGA130X1000-38-FS2-N | -75 | 2896 | | 832 | Round Ø 12 | Yes | Yes | Flow resistance | 8.1 |
| ZGA130X1000-38-FS2-P | -75 | 2896 | | 832 | Round Ø 12 | Yes | Yes | Flow resistance | 8.1 |
| ZGA130X1200-38-CL2 | -75 | 2896 | | 832 | Round Ø 12 | No | No | Non-return valve | 9.4 |
| ZGA130X1200-38-CL2-N | -75 | 2896 | | 832 | Round Ø 12 | Yes | Yes | Non-return valve | 9.4 |
| ZGA130X1200-38-CL2-P | -75 | 2896 | | 832 | Round Ø 12 | Yes | Yes | Non-return valve | 9.4 |
| ZGA130X1200-38-FL2 | -75 | 2896 | | 832 | Round Ø 12 | No | No | Flow resistance | 9.4 |
| ZGA130X1200-38-FL2-N | -75 | 2896 | | 832 | Round Ø 12 | Yes | Yes | Flow resistance | 9.4 |
| ZGA130X1200-38-FL2-P | -75 | 2896 | | 832 | Round Ø 12 | Yes | Yes | Flow resistance | 9.4 |
| ZGA130X1200-38-FS2 | -75 | 2896 | | 832 | Round Ø 12 | No | No | Flow resistance | 9.4 |
| ZGA130X1200-38-FS2-N | -75 | 2896 | | 832 | Round Ø 12 | Yes | Yes | Flow resistance | 9.4 |
| ZGA130X1200-38-FS2-P | -75 | 2896 | | 832 | Round Ø 12 | Yes | Yes | Flow resistance | 9.4 |
| ZGA200X300-34-CL2 | -75 | 1448 | | 416 | Round Ø 12 | No | No | Non-return valve | 3.5 |
| ZGA200X300-34-CL2-N | -75 | 1448 | | 416 | Round Ø 12 | Yes | Yes | Non-return valve | 3.5 |
| ZGA200X300-34-CL2-P | -75 | 1448 | | 416 | Round Ø 12 | Yes | Yes | Non-return valve | 3.5 |
| ZGA200X300-34-FL2 | -75 | 1448 | | 416 | Round Ø 12 | No | No | Flow resistance | 3.5 |
| ZGA200X300-34-FL2-N | -75 | 1448 | | 416 | Round Ø 12 | Yes | Yes | Flow resistance | 3.5 |
| ZGA200X300-34-FL2-P | -75 | 1448 | | 416 | Round Ø 12 | Yes | Yes | Flow resistance | 3.5 |
| ZGA200X300-34-FS2 | -75 | 1448 | | 416 | Round Ø 12 | No | No | Flow resistance | 3.5 |

| Order no. | ► Technical data | | | | | | | | |
|---|---|---|---|---|---|---|---|---|---|
| | Max. vacuum level [kPa] | Volume flow [l/min] | Air consumption at 4 bar [l/min] | Air consumption at 6 bar [l/min] | Hole pattern of the sealing element | Air control valve | Blow-off control valve | Valve type of the area gripper | Weight [kg] |
| ZGA200X300-34-FS2-N | -75 | 1448 | | 416 | Round Ø 12 | Yes | Yes | Flow resistance | 3.5 |
| ZGA200X300-34-FS2-P | -75 | 1448 | | 416 | Round Ø 12 | Yes | Yes | Flow resistance | 3.5 |
| ZGA200X400-34-CL2 | -75 | 1448 | | 416 | Round Ø 12 | No | No | Non-return valve | 4.4 |
| ZGA200X400-34-CL2-N | -75 | 1448 | | 416 | Round Ø 12 | Yes | Yes | Non-return valve | 4.4 |
| ZGA200X400-34-CL2-P | -75 | 1448 | | 416 | Round Ø 12 | Yes | Yes | Non-return valve | 4.4 |
| ZGA200X400-34-FL2 | -75 | 1448 | | 416 | Round Ø 12 | No | No | Flow resistance | 4.4 |
| ZGA200X400-34-FL2-N | -75 | 1448 | | 416 | Round Ø 12 | Yes | Yes | Flow resistance | 4.4 |
| ZGA200X400-34-FL2-P | -75 | 1448 | | 416 | Round Ø 12 | Yes | Yes | Flow resistance | 4.6 |
| ZGA200X400-34-FS2 | -75 | 1448 | | 416 | Round Ø 12 | No | No | Flow resistance | 4.4 |
| ZGA200X400-34-FS2-N | -75 | 1448 | | 416 | Round Ø 12 | Yes | Yes | Flow resistance | 4.4 |
| ZGA200X400-34-FS2-P | -75 | 1448 | | 416 | Round Ø 12 | Yes | Yes | Flow resistance | 4.4 |
| ZGA200X600-38-CL2 | -75 | 2896 | | 832 | Round Ø 12 | No | No | Non-return valve | 7.1 |
| ZGA200X600-38-CL2-N | -75 | 2896 | | 832 | Round Ø 12 | Yes | Yes | Non-return valve | 7.1 |
| ZGA200X600-38-CL2-P | -75 | 2896 | | 832 | Round Ø 12 | Yes | Yes | Non-return valve | 7.1 |
| ZGA200X600-38-FL2 | -75 | 2896 | | 832 | Round Ø 12 | No | No | Flow resistance | 7.1 |
| ZGA200X600-38-FL2-N | -75 | 2896 | | 832 | Round Ø 12 | Yes | Yes | Flow resistance | 7.1 |
| ZGA200X600-38-FL2-P | -75 | 2896 | | 832 | Round Ø 12 | Yes | Yes | Flow resistance | 7.1 |
| ZGA200X600-38-FS2 | -75 | 2896 | | 832 | Round Ø 12 | No | No | Flow resistance | 7.1 |
| ZGA200X600-38-FS2-N | -75 | 2896 | | 832 | Round Ø 12 | Yes | Yes | Flow resistance | 7.1 |
| ZGA200X600-38-FS2-P | -75 | 2896 | | 832 | Round Ø 12 | Yes | Yes | Flow resistance | 7.1 |
| ZGA200X800-38-CL2 | -75 | 2896 | | 832 | Round Ø 12 | No | No | Non-return valve | 8.6 |
| ZGA200X800-38-CL2-N | -75 | 2896 | | 832 | Round Ø 12 | Yes | Yes | Non-return valve | 8.6 |
| ZGA200X800-38-CL2-P | -75 | 2896 | | 832 | Round Ø 12 | Yes | Yes | Non-return valve | 8.6 |
| ZGA200X800-38-FL2 | -75 | 2896 | | 832 | Round Ø 12 | No | No | Flow resistance | 8.6 |
| ZGA200X800-38-FL2-N | -75 | 2896 | | 832 | Round Ø 12 | Yes | Yes | Flow resistance | 8.6 |
| ZGA200X800-38-FL2-P | -75 | 2896 | | 832 | Round Ø 12 | Yes | Yes | Flow resistance | 8.6 |
| ZGA200X800-38-FS2 | -75 | 2896 | | 832 | Round Ø 12 | No | No | Flow resistance | 8.6 |
| ZGA200X800-38-FS2-N | -75 | 2896 | | 832 | Round Ø 12 | Yes | Yes | Flow resistance | 8.6 |
| ZGA200X800-38-FS2-P | -75 | 2896 | | 832 | Round Ø 12 | Yes | Yes | Flow resistance | 8.6 |
| ZGA200X1000-38-CL2 | -75 | 2896 | | 832 | Round Ø 12 | No | No | Non-return valve | 10 |
| ZGA200X1000-38-CL2-N | -75 | 2896 | | 832 | Round Ø 12 | Yes | Yes | Non-return valve | 10 |
| ZGA200X1000-38-CL2-P | -75 | 2896 | | 832 | Round Ø 12 | Yes | Yes | Non-return valve | 10 |
| ZGA200X1000-38-FL2 | -75 | 2896 | | 832 | Round Ø 12 | No | No | Flow resistance | 10 |
| ZGA200X1000-38-FL2-N | -75 | 2896 | | 832 | Round Ø 12 | Yes | Yes | Flow resistance | 10 |
| ZGA200X1000-38-FL2-P | -75 | 2896 | | 832 | Round Ø 12 | Yes | Yes | Flow resistance | 10 |
| ZGA200X1000-38-FS2 | -75 | 2896 | | 832 | Round Ø 12 | No | No | Flow resistance | 10 |
| ZGA200X1000-38-FS2-N | -75 | 2896 | | 832 | Round Ø 12 | Yes | Yes | Flow resistance | 10 |
| ZGA200X1000-38-FS2-P | -75 | 2896 | | 832 | Round Ø 12 | Yes | Yes | Flow resistance | 10 |
| ZGA200X1200-38-CL2 | -75 | 2896 | | 832 | Round Ø 12 | No | No | Non-return valve | 13 |
| ZGA200X1200-38-CL2-N | -75 | 2896 | | 832 | Round Ø 12 | Yes | Yes | Non-return valve | 13 |
| ZGA200X1200-38-CL2-P | -75 | 2896 | | 832 | Round Ø 12 | Yes | Yes | Non-return valve | 13 |
| ZGA200X1200-38-FL2 | -75 | 2896 | | 832 | Round Ø 12 | No | No | Flow resistance | 13 |
| ZGA200X1200-38-FL2-N | -75 | 2896 | | 832 | Round Ø 12 | Yes | Yes | Flow resistance | 13 |
| ZGA200X1200-38-FL2-P | -75 | 2896 | | 832 | Round Ø 12 | Yes | Yes | Flow resistance | 13 |
| ZGA200X1200-38-FS2 | -75 | 2896 | | 832 | Round Ø 12 | No | No | Flow resistance | 13 |
| ZGA200X1200-38-FS2-N | -75 | 2896 | | 832 | Round Ø 12 | Yes | Yes | Flow resistance | 13 |
| ZGA200X1200-38-FS2-P | -75 | 2896 | | 832 | Round Ø 12 | Yes | Yes | Flow resistance | 13 |
| ZGA300X300-34-CL2 | -75 | 1448 | | 416 | Round Ø 12 | No | No | Non-return valve | 3.8 |
| ZGA300X300-34-CL2-N | -75 | 1448 | | 416 | Round Ø 12 | Yes | Yes | Non-return valve | 3.8 |
| ZGA300X300-34-CL2-P | -75 | 1448 | | 416 | Round Ø 12 | Yes | Yes | Non-return valve | 3.8 |
| ZGA300X300-34-FL2 | -75 | 1448 | | 416 | Round Ø 12 | No | No | Flow resistance | 3.8 |
| ZGA300X300-34-FL2-N | -75 | 1448 | | 416 | Round Ø 12 | Yes | Yes | Flow resistance | 3.8 |
| ZGA300X300-34-FL2-P | -75 | 1448 | | 416 | Round Ø 12 | Yes | Yes | Flow resistance | 3.8 |
| ZGA300X300-34-FS2 | -75 | 1448 | | 416 | Round Ø 12 | No | No | Flow resistance | 3.8 |
| ZGA300X300-34-FS2-N | -75 | 1448 | | 416 | Round Ø 12 | Yes | Yes | Flow resistance | 3.8 |
| ZGA300X300-34-FS2-P | -75 | 1448 | | 416 | Round Ø 12 | Yes | Yes | Flow resistance | 3.8 |
| ZGA300X400-34-CL2 | -75 | 1448 | | 416 | Round Ø 12 | No | No | Non-return valve | 6.1 |
| ZGA300X400-34-CL2-N | -75 | 1448 | | 416 | Round Ø 12 | Yes | Yes | Non-return valve | 6.1 |
| ZGA300X400-34-CL2-P | -75 | 1448 | | 416 | Round Ø 12 | Yes | Yes | Non-return valve | 6.1 |

# VACUUM GRIPPING SYSTEM
## SERIES ZGA

| Order no. | ► Technical data | | | | | | | | |
|---|---|---|---|---|---|---|---|---|---|
| | Max. vacuum level [kPa] | Volume flow [l/min] | Air consumption at 4 bar [l/min] | Air consumption at 6 bar [l/min] | Hole pattern of the sealing element | Air control valve | Blow-off control valve | Valve type of the area gripper | Weight [kg] |
| ZGA300X400-34-FL2 | -75 | 1448 | | 416 | Round Ø 12 | No | No | Flow resistance | 6.1 |
| ZGA300X400-34-FL2-N | -75 | 1448 | | 416 | Round Ø 12 | Yes | Yes | Flow resistance | 6.1 |
| ZGA300X400-34-FL2-P | -75 | 1448 | | 416 | Round Ø 12 | Yes | Yes | Flow resistance | 6.1 |
| ZGA300X400-34-FS2 | -75 | 1448 | | 416 | Round Ø 12 | No | No | Flow resistance | 6.1 |
| ZGA300X400-34-FS2-N | -75 | 1448 | | 416 | Round Ø 12 | Yes | Yes | Flow resistance | 6.1 |
| ZGA300X400-34-FS2-P | -75 | 1448 | | 416 | Round Ø 12 | Yes | Yes | Flow resistance | 6.1 |
| ZGA300X600-38-CL2 | -75 | 2896 | | 832 | Round Ø 12 | No | No | Non-return valve | 9.6 |
| ZGA300X600-38-CL2-N | -75 | 2896 | | 832 | Round Ø 12 | Yes | Yes | Non-return valve | 9.6 |
| ZGA300X600-38-CL2-P | -75 | 2896 | | 832 | Round Ø 12 | Yes | Yes | Non-return valve | 9.6 |
| ZGA300X600-38-FL2 | -75 | 2896 | | 832 | Round Ø 12 | No | No | Flow resistance | 9.6 |
| ZGA300X600-38-FL2-N | -75 | 2896 | | 832 | Round Ø 12 | Yes | Yes | Flow resistance | 9.6 |
| ZGA300X600-38-FL2-P | -75 | 2896 | | 832 | Round Ø 12 | Yes | Yes | Flow resistance | 9.6 |
| ZGA300X600-38-FS2 | -75 | 2896 | | 832 | Round Ø 12 | No | No | Flow resistance | 9.6 |
| ZGA300X600-38-FS2-N | -75 | 2896 | | 832 | Round Ø 12 | Yes | Yes | Flow resistance | 9.6 |
| ZGA300X600-38-FS2-P | -75 | 2896 | | 832 | Round Ø 12 | Yes | Yes | Flow resistance | 9.6 |
| ZGA300X800-38-CL2 | -75 | 2896 | | 832 | Round Ø 12 | No | No | Non-return valve | 12 |
| ZGA300X800-38-CL2-N | -75 | 2896 | | 832 | Round Ø 12 | Yes | Yes | Non-return valve | 12 |
| ZGA300X800-38-CL2-P | -75 | 2896 | | 832 | Round Ø 12 | Yes | Yes | Non-return valve | 12 |
| ZGA300X800-38-FL2 | -75 | 2896 | | 832 | Round Ø 12 | No | No | Flow resistance | 12 |
| ZGA300X800-38-FL2-N | -75 | 2896 | | 832 | Round Ø 12 | Yes | Yes | Flow resistance | 12 |
| ZGA300X800-38-FL2-P | -75 | 2896 | | 832 | Round Ø 12 | Yes | Yes | Flow resistance | 12 |
| ZGA300X800-38-FS2 | -75 | 2896 | | 832 | Round Ø 12 | No | No | Flow resistance | 12 |
| ZGA300X800-38-FS2-N | -75 | 2896 | | 832 | Round Ø 12 | Yes | Yes | Flow resistance | 12 |
| ZGA300X800-38-FS2-P | -75 | 2896 | | 832 | Round Ø 12 | Yes | Yes | Flow resistance | 12 |
| ZGA300X1000-38-CL2 | -75 | 2896 | | 832 | Round Ø 12 | No | No | Non-return valve | 15 |
| ZGA300X1000-38-CL2-N | -75 | 2896 | | 832 | Round Ø 12 | Yes | Yes | Non-return valve | 15 |
| ZGA300X1000-38-CL2-P | -75 | 2896 | | 832 | Round Ø 12 | Yes | Yes | Non-return valve | 15 |
| ZGA300X1000-38-FL2 | -75 | 2896 | | 832 | Round Ø 12 | No | No | Flow resistance | 15 |
| ZGA300X1000-38-FL2-N | -75 | 2896 | | 832 | Round Ø 12 | Yes | Yes | Flow resistance | 15 |
| ZGA300X1000-38-FL2-P | -75 | 2896 | | 832 | Round Ø 12 | Yes | Yes | Flow resistance | 15 |
| ZGA300X1000-38-FS2 | -75 | 2896 | | 832 | Round Ø 12 | No | No | Flow resistance | 15 |
| ZGA300X1000-38-FS2-N | -75 | 2896 | | 832 | Round Ø 12 | Yes | Yes | Flow resistance | 15 |
| ZGA300X1000-38-FS2-P | -75 | 2896 | | 832 | Round Ø 12 | Yes | Yes | Flow resistance | 15 |
| ZGA300X1200-38-CL2 | -75 | 2896 | | 832 | Round Ø 12 | No | No | Non-return valve | 18 |
| ZGA300X1200-38-CL2-N | -75 | 2896 | | 832 | Round Ø 12 | Yes | Yes | Non-return valve | 18 |
| ZGA300X1200-38-CL2-P | -75 | 2896 | | 832 | Round Ø 12 | Yes | Yes | Non-return valve | 18 |
| ZGA300X1200-38-FL2 | -75 | 2896 | | 832 | Round Ø 12 | No | No | Flow resistance | 18 |
| ZGA300X1200-38-FL2-N | -75 | 2896 | | 832 | Round Ø 12 | Yes | Yes | Flow resistance | 18 |
| ZGA300X1200-38-FL2-P | -75 | 2896 | | 832 | Round Ø 12 | Yes | Yes | Flow resistance | 18 |
| ZGA300X1200-38-FS2 | -75 | 2896 | | 832 | Round Ø 12 | No | No | Flow resistance | 18 |
| ZGA300X1200-38-FS2-N | -75 | 2896 | | 832 | Round Ø 12 | Yes | Yes | Flow resistance | 18 |
| ZGA300X1200-38-FS2-P | -75 | 2896 | | 832 | Round Ø 12 | Yes | Yes | Flow resistance | 18 |