AXIS COMPENSATION MODULES
SERIES ZR1000

▶ PRODUCT ADVANTAGES

▶ **Adjustable trigger sensitivity**

By controlling the air pressure, you can optimally adjust the sensitivity to your application.

▶ **Integrated sensors**

When deflection occurs in the Z direction, the optionally available sensor sends two teachable signals to the controller.

▶ **Pneumatic locking**

After pneumatic actuation, the axis compensation is locked in a defined end position and can be subjected to high dynamic loads.

▶ SERIES CHARACTERISTICS

Installation size	Version
ZR1XXX	-A
1 million maintenance-free cycles (max.)	●
Magnetic field sensor	●
Protected against corrosion	●
Purged air	●
IP40	●

▶ BENEFITS IN DETAIL

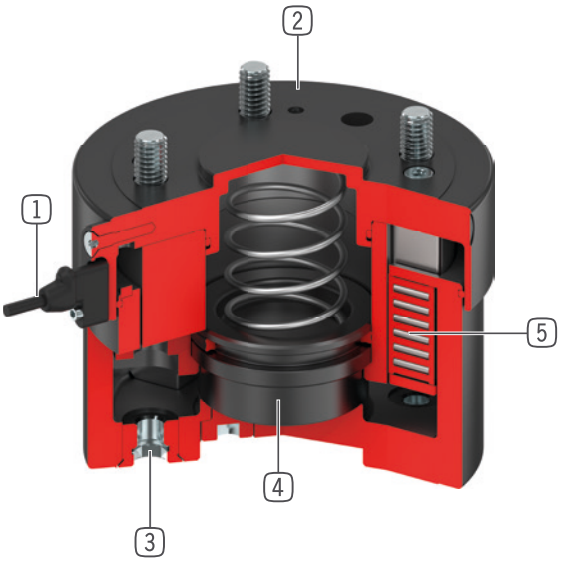

1 **Piston position sensing**
- via magnetic field sensor
- optionally available as accessories

2 **Robust, lightweight housing**
- Hard-coated aluminum alloy
- lowest overall height
- IP40 protection class in standard

3 **Connecting flange**
- partial mounting circle in accordance with EN ISO 9409-1

4 **Locking piston**
- single-acting pneumatic cylinder
- with integrated spring
- locks the Z-axis

5 **Linear guide**
- for highest force and moments capacity
- Steel/steel guide stands for lasting precision

▶ TECHNICAL DATA

Installation size	Connecting flange according EN ISO 9409-1	Stroke in Z-axis [mm]	Holding force [N]	Weight [kg]
ZR1040	TK 40	8	250	0.52
ZR1050	TK 50	8	500	0.67
ZR1063	TK 63	10	1000	1.1
ZR1080	TK 80	10	1500	1.8
ZR1100	TK 100	15	3000	3.1
ZR1125	TK 125	15	4500	5.1
ZR1160	TK 160	20	6500	8.9
ZR1200	TK 200	20	11500	13

▶ FURTHER INFORMATION IS AVAILABLE ONLINE

All information just a click away at: www.zimmer-group.com. Find data, illustrations, 3D models and operating instructions for your installation size using the order number for your desired product. Quick, clear and always up-to-date.

AXIS COMPENSATION MODULES
INSTALLATION SIZE ZR1040

▶ PRODUCT SPECIFICATIONS

▶ Variable installation position

Shows the maximum handling weight as a function of acceleration and the center of gravity distance from the center of the bolt-on surface. Does not replace the technical design.

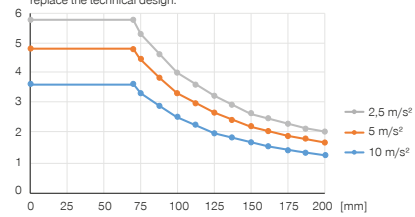

▶ Forces and moments

Shows the maximum forces and moments

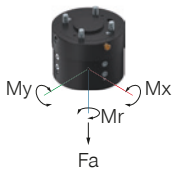

	pressurized	depressurized
Mr [Nm]	20	20
Mx [Nm]	10	5
My [Nm]	10	5
Fa [N]	250	250

▶ Variable installation position

Shows the maximum deflection a as a function of the load F and the distance L. Does not replace the technical design.

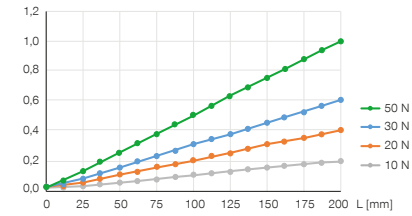

▶ Deflection

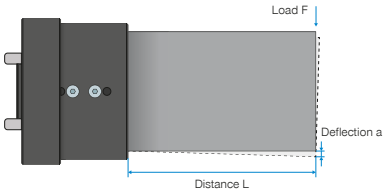

▶ INCLUDED IN DELIVERY

1 [piece]
Sensor holder
ZUB000035

▶ RECOMMENDED ACCESSORIES

ENERGY SUPPLY

GVM5
Straight Fittings - Quick Connect Style

WVM5
Angled Fittings - Quick Connect Style

CONNECTIONS / OTHER

KAG500B4
Plug-in connector Straight Cable 5m - female connector M8

KAW500B4
Plug-in connector Angled Cable 5m - female connector M8

SENSORS

MFS01-S-KHC-P2-PNP
2-point sensor angled, cable 0.3 m - M8 connector

	► Technical data
Order no.	**ZR1040-A**
Connecting flange according EN ISO 9409-1	TK 40
Stroke in Z-axis [mm]	8
Holding force [N]	250
Spring force [N]	22 ... 29
Repetition accuracy +/- [mm]	0.01
Operating pressure [bar]	1 ... 8
Nominal operating pressure [bar]	6
Operating temperature [°C]	5 ... +80
Air volume per cycle [cm³]	11
Moment of inertia around the Z-axis [kgcm²]	4
Certifications	LABS / REACH / RoHS
Protection to IEC 60529	IP40
Weight [kg]	0.52

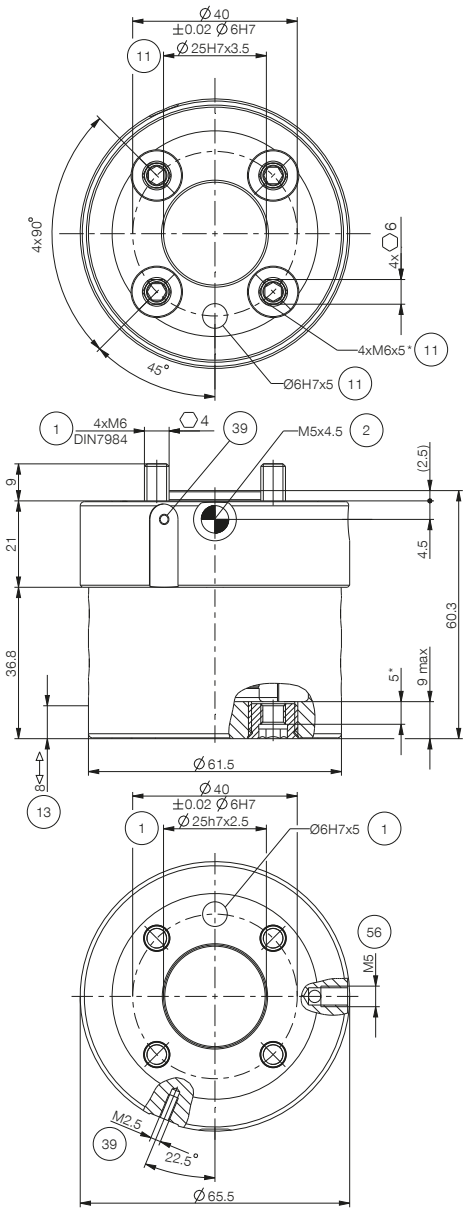

1 Fixing (robot side)
2 Energy supply
11 Fixing (customer-side)
13 Stroke Z
39 Fixing sensor bracket
56 Venting