INSTALLATION AND OPERATING INSTRUCTIONS

2-jaw parallel gripper
GEH6000
3-jaw concentric gripper
GED6000
IO-Link

DDOC00212

THE KNOW-HOW FACTORY

Glossary

Term	Explanation
ActualPosition	Value of the current jaw position [1/100 mm]
BasePosition	Outer jaw position Depending on the application, this can be the base position or the work position.
ControlWord	Activation of the product Only one bit is permitted to be active in the ControlWord. The value 0 is also permitted.
DeviceMode	Used to select gripping profiles as well as the additional help modes in the product.
Diagnosis	If an error occurs, outputs a diagnostic code that can be compared with the error list.
GND	Ground/earth
GripForce	Setting the gripping force
Offset	Correction value
PositionTolerance	Tolerance range for TeachPosition The value of the parameter acts in both directions.
ShiftPosition	ShiftPosition is a switching position between pre-positioning and gripper movement.
StatusWord	Summary of binary states of the product that can be returned as information to the control system.
STO/Safe Torque OFF	Safety function of drives that prevents any torque from being generated in case of an emergency stop, even if the product is still connected to the voltage supply.
Teach	Adoption of the ActualPosition as the TeachPosition
TeachPosition	Taught-in workpiece position
Travel path	Path on which the gripper jaws travel.
WorkpieceNo	Number of the selected workpiece recipe
WorkPosition	Inner jaw position Depending on the application, this can be the standby position or the work position.

Content

1 Introduction 5
1.1 Supporting documents 5
1.2 Notices and graphics in the instructions 5

2 Safety notices 6

3 Proper use 7

4 Personnel qualification 7
4.1 Electricians 7
4.2 Specialists 7
4.3 Instructed personnel 7
4.4 Service personnel 7
4.5 Additional qualifications 7

5 Product description 8
5.1 Possible applications 8
5.2 Type plate 8

6 Functional description 9
6.1 LED status display 10
6.2 Verified configuration examples 10

7 Technical data 11

8 Accessories/scope of delivery 11

9 Transportation/storage/preservation 11

10 Installation 12
10.1 Installing the product 13
10.2 Safe shutoff for products with IO-Link 14
10.2.1 Without an STO cable 14
10.2.2 With an STO cable 15
10.3 Installing the energy supply 16
10.3.1 Pin assignment 16
10.3.2 Pin assignment of the Y plug-in connector 17
10.3.3 PIN assignment of the STO 18
10.4 Wiring 18
10.5 Static charge 19
10.6 Heat dissipation 19
10.7 Installing accessories 19

11 Commissioning 20
11.1 Process data 20
11.2 IODD Import 21
11.3 Data transmission via handshake 21
11.4 Parameters 22
11.4.1 ControlWord 22
11.4.2 DeviceMode 23
11.4.3 WorkpieceNo 24
11.4.4 PositionTolerance 24
11.4.5 GripForce 25
11.4.6 DriveVelocity 25
11.4.7 BasePosition 25
11.4.8 ShiftPosition 26
11.4.9 TeachPosition 26
11.4.10 WorkPosition 26
11.4.11 StatusWord 27

DDOC00212 / w EN / 2025-12-15

11.4.12 Diagnosis 28
11.4.13 ActualPosition 28
11.5 Cold start 29
11.6 Minimum travel path 29
11.7 Minimum positioning path 29
11.8 Referencing by Homing 30
11.8.1 DeviceMode 10 31
11.8.2 DeviceMode 14 31
11.8.3 DeviceMode 16 32
11.8.4 DeviceMode 17 33
11.9 Movement profiles GEH6xxxIL-03-B/GED6xxxIL-03-A 35
11.9.1 DeviceMode 35
11.9.2 Positioning profiles 36
11.9.3 Force profiles 37
11.10 Movement profiles GEH6xxxIL-31-B/GED6xxxIL-31-A 43
11.10.1 DeviceMode 43
11.10.2 Positioning profiles 44
11.10.3 Force profiles 45
11.11 Interrupting the voltage supply 49
11.12 Easy Startup 49
11.13 Quickstart Basic Parameters 50
11.14 Starting jaw movement 51
11.15 Repeated movements in the same direction 51
11.16 Recipe examples 52
11.16.1 Save recipe 52
11.16.2 Loading a recipe 53

12 Operation 54
12.1 Emergency release for GEH6000IL 54
12.2 Emergency release for GED6000IL 55

13 Gripping force charts 55

14 Error diagnosis 56

15 Table with acyclic data (ISDU) 58

16 Maintenance 61
16.1 Testing the STO safety function 62

17 Decommissioning/disposal 63

18 RoHS declaration 64

19 Declaration of Incorporation 65

20 Declaration of Conformity 66

1 Introduction

1.1 Supporting documents

NOTICE

Read through the instructions before installing or working with the product.

The instructions contain important notes for your personal safety. They must be read and understood by all persons who work with or handle the product during any phase of the product lifetime.

The documents listed below are available for download on our website www.zimmer-group.com.

- Installation and operating instructions
- Catalogs, drawings, CAD data, performance data
- Information on accessories
- Technical data sheets
- General Terms and Conditions, including warranty information.

⇨ Only those documents currently available on the website are valid.

In these instructions, "product" refers to the product designation on the title page!

1.2 Notices and graphics in the instructions

DANGER

This notice warns of an imminent danger to the life and health of people. Ignoring these notices can lead to serious injury or even death.

▶ You absolutely must comply with the described measures for avoiding these dangers!

⇨ The warning symbols are assigned according to the type of danger.

WARNING

This notice warns of a situation that is potentially hazardous to personal health. Ignoring these notices can cause serious injury or damage to health.

▶ You absolutely must comply with the described measures for avoiding these dangers!

⇨ The warning symbols are assigned according to the type of danger.

CAUTION

This notice warns of a situation that is potentially hazardous to persons. Ignoring these notices can cause minor, reversible injuries.

▶ You absolutely must comply with the described measures for avoiding these dangers!

⇨ The warning symbols are assigned according to the type of danger.

NOTICE

This notice warns of possible material and environmental damage. Ignoring these notices can result in damage to the product or the environment.

▶ You absolutely must comply with the described measures for avoiding these dangers!

⇨ The warning symbols are assigned according to the type of danger.

INFORMATION

This category contains useful tips for handling the product efficiently. Failure to observe these tips will not result in damage to the product. This information does not include any information relevant to health or workplace safety.

DDOC00212 / w EN / 2025-12-15

2 Safety notices

CAUTION

Risk of injury and material damage in case of non-compliance

The installation shall be made by qualified installation personnel and should conform to all national and local codes.

The product is state-of-the-art.

The following are examples of situations in which the product may cause a hazard:

- The product is not properly installed, used or maintained.
- The product is not used for its designated purpose.
- The locally applicable regulations, laws, directives or guidelines are not observed.

▶ The product may only be used in accordance with these instructions and the product's technical data. Any changes or additions to the intended use of the product, as well as modifications to the product, such as those in the following examples, require the written permission of the manufacturer:

- Use of the product under extreme conditions, such as aggressive fluids or abrasive dusts
- Additional drilled holes or threads

⇨ Zimmer Group GmbH shall accept no liability for any damage caused by improper use. The operator bears sole responsibility.

▶ Make sure that the power supply is disconnected before you mount, adjust, modify, maintain or repair the product.

▶ Whenever work is carried out on the product, make sure that the product cannot be actuated by mistake.

▶ Perform maintenance tasks, renovation work or attachment work outside of the machine's danger zone when possible.

▶ Do not reach into the operational range of the product.

▶ Always adhere to the required maintenance intervals.

▶ When using the product under extreme conditions, adjust the maintenance interval according to the degree of contamination.

▶ Check the completeness and tightening torques of all mounting screws.

CAUTION

Notes and handling regulations for electrostatically sensitive components

Electrostatically sensitive components are individual components, integrated circuits or assemblies that can be damaged by electrostatic fields or electrostatic discharge.

▶ When handling electrostatic components, make sure that persons, the work area and packaging are all fully grounded.

▶ Touch electronic components only in appropriately identified areas with conductive flooring and only if:

- You are grounded by means of special bracelets.
- You wear shoes that are suitable and approved for the discharge of electrostatic charges.

▶ Do not bring electronic assemblies into contact with plastics and parts of clothing that have plastic content.

▶ Store electronic assemblies on conductive underlays only.

▶ Do not install electronic assemblies in the vicinity of data back-up devices or monitors (monitor distance > 100 mm).

▶ Perform measurements on electronic assemblies only if:

- The measuring instrument is grounded (e.g. via a ground conductor).
- The measuring head is momentarily discharged before measuring with a floating measuring instrument.

3 Proper use

NOTICE

Material damage and malfunction in case of non-compliance

The product is only to be used in its original state with its original accessories, with no unauthorized changes and within the stipulated parameter limits and operating conditions.

Any other or secondary use is deemed improper.

- ▶ Operate the product only in compliance with the associated instructions.
- ▶ Operate the product only when it is in a technical condition that corresponds to the guaranteed parameters and operating conditions.
- ⇨ Zimmer Group GmbH shall accept no liability for any damage caused by improper use. The operator bears sole responsibility.

- The product is to be used as intended in enclosed rooms for temporary gripping, handling and holding.
- The product is intended for industrial use.
- The product is not suited for use in a potentially explosive atmosphere.
- Direct contact with perishable goods/food is not permitted.
- The product must always be mounted on materials that dissipate heat.
- The product is not suitable for clamping workpieces during a machining process.
- The product is designed exclusively for electric operation using a supply voltage of 24 V DC from a current source in accordance with UL Class 2.

4 Personnel qualification

WARNING

Inadequate qualification can cause injury and material damage

If inadequately qualified personnel perform work on the product, this can cause serious injuries and significant material damage.

- ▶ All work on the product must be performed by qualified personnel.
- ▶ Before working with the product, read the document in its entirety and make sure that you have understood everything.
- ▶ Observe country-specific accident prevention regulations and the general safety notices.

The following qualifications are a prerequisite for performing various work on the product.

4.1 Electricians

Electricians are able to perform work on electrical systems, can recognize and avoid possible dangers and know the relevant standards and provisions due to their technical training, knowledge and experience.

4.2 Specialists

Specialists are able to perform the assigned work, can recognize and avoid possible dangers and know the relevant standards and provisions due to their technical training, knowledge and experience.

4.3 Instructed personnel

Instructed personnel have been trained by the operating company on the tasks and possible dangers of improper behavior.

4.4 Service personnel

Service personnel are able to perform the assigned work and can recognize and avoid possible dangers due to their technical training, knowledge and experience.

4.5 Additional qualifications

Persons who work with the product must be familiar with the valid safety regulations and laws as well as the standards, guidelines and laws listed in this document.

Personnel who work with the product must have facility-issued authorization to commission, program, configure, operate, maintain and also decommission this product.

5 Product description

5.1 Possible applications

Outside gripping

The product can be used for outside gripping.

MoveToWork command

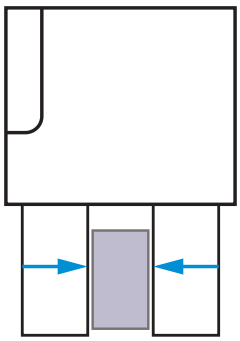

Inside gripping

The product can be used for inside gripping.

MoveToBase command

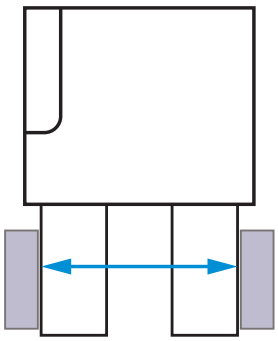

5.2 Type plate

A type plate is attached to the product.

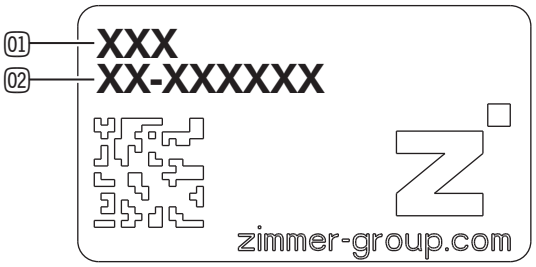

01 Article number

02 Confirmation number

6 Functional description

The gripper jaws of the 2-jaw parallel gripper are arranged parallel to each other on two opposing guide rails and can be moved relative to each other.

The gripper jaws of the 3-jaw concentric gripper are arranged on three guide rails offset to each other at a 120° angle.

The force of the motor is transmitted over a gear to a worm gear. The movement is transferred from the worm gear to the toothed gripper jaws and a synchronized movement is generated.

Depending on the product variant, the product has a mechanical self-locking mechanism to ensure that the workpiece remains held in the event of a loss of power.

The product can be easily integrated into available control systems and controlled via IO-Link.

The gripping force can be adapted optimally to the workpiece conditions via IO-Link.

GEH6000IL

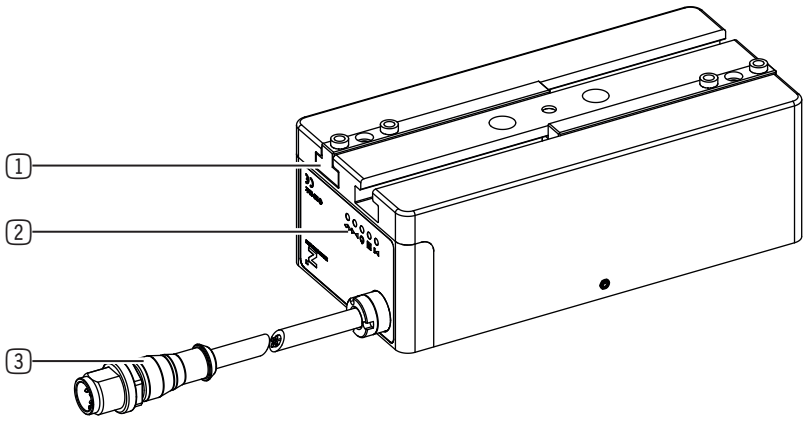

GED6000IL

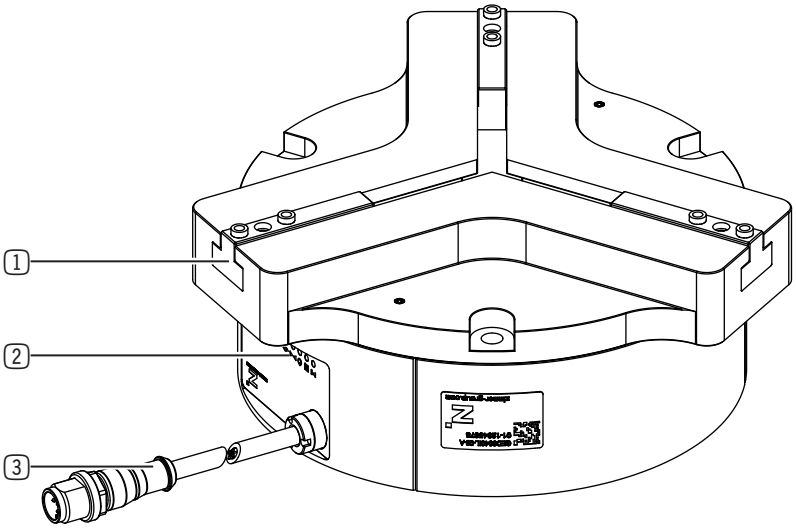

1 Gripper jaw

2 LED display

3 Power supply

6.1 LED status display

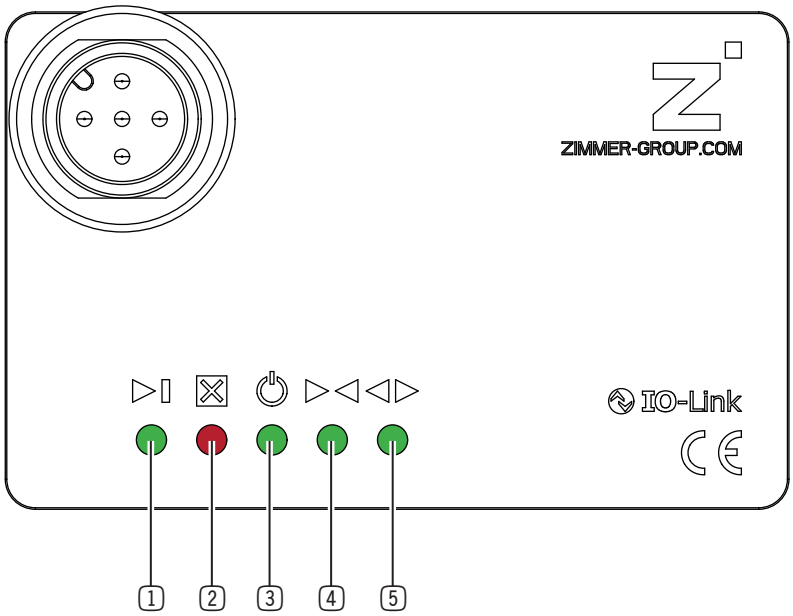

1. TeachPosition
2. Error
3. Power supply
4. WorkPosition
5. BasePosition

6.2 Verified configuration examples

INFORMATION

- ▶ You can find the information in the technical data sheet on our website.
- ▶ Please contact Customer Service if you have any questions.

7 Technical data

INFORMATION

► You can find the information in the technical data sheet on our website.

This data varies within the series, depending on the specific design.

8 Accessories/scope of delivery

INFORMATION

If any accessories not sold or authorized by Zimmer Group GmbH are used, the function of the product cannot be guaranteed. Zimmer Group GmbH accessories are specifically tailored to the individual products.

► For optional accessories and those included in the scope of delivery, refer to our website.

9 Transportation/storage/preservation

- ► Transport and storage of the product must be done only with the original packaging.
- ► If the product has already been installed on the superordinate machine unit, care must be taken during transport to ensure that no unexpected movements can occur.
  - ► Before commissioning the product and after transport, check all power and communication connections as well as all mechanical connections.
- ► If the product is stored for an extended period, the following points are to be observed:
  - ► Keep the storage location as dust-free and dry as possible.
  - ► Avoid temperature fluctuations.
  - ► Avoid wind/drafts/water condensation formation.
  - ► Pack the product and do not expose it to direct sunlight during storage.
- ► Clean all components. There must be no soiling left on the components.
- ► Visually inspect all components.
- ► Remove all foreign substances.
- ► Properly remove potential corrosion spots.
- ► Close electrical connections using suitable covers.

10 Installation

WARNING

Risk of injury due to uncontrolled movements

Risk of injury in case of unexpected movement of the machine or system into which the product is to be installed.

- ► Switch off the energy supply of the machine before any work.
- ► Secure the power supply against being switched on unintentionally.
- ► Check the machine for any residual energy that may be present.

CAUTION

Risk of injury due to uncontrolled movements

Risk of injury in the event of uncontrolled movement of the product when the power supply is connected.

- ► Switch off the power supply to the machine before carrying out any work.
- ► Secure the power supply against being switched on unintentionally.
- ► Check the machine for any residual energy that may be present.

Assembly requirements		
Permissible flatness tolerance [mm]	Mounting surface length [mm] ≤ 100	0.02
	Mounting surface length [mm] > 100	0.05
Strength class of the mounting screws	8.8	

INFORMATION

Further installation information:

- The mounting screws are not included in the scope of delivery.

- ► Install the product on an appropriate mounting surface in accordance with the flatness specifications.
- ► Make sure that the mounting piece is sufficiently rigid.
- ► Ensure the cleanliness of the connection surfaces.
- ► Please note the permitted tightening torques of the mounting screws at www.zimmer-group.com/en/td.

10.1 Installing the product

The product can be installed from multiple sides.

- ▶ Insert the straight pins or the centering sleeves into the provided fits on the product.
- The type of positioning varies within the series.
- ▶ Position the product on the mounting piece with centering sleeves or straight pins.
- ▶ Mount the product on the mounting piece using the appropriate mounting screws.

GEH6000

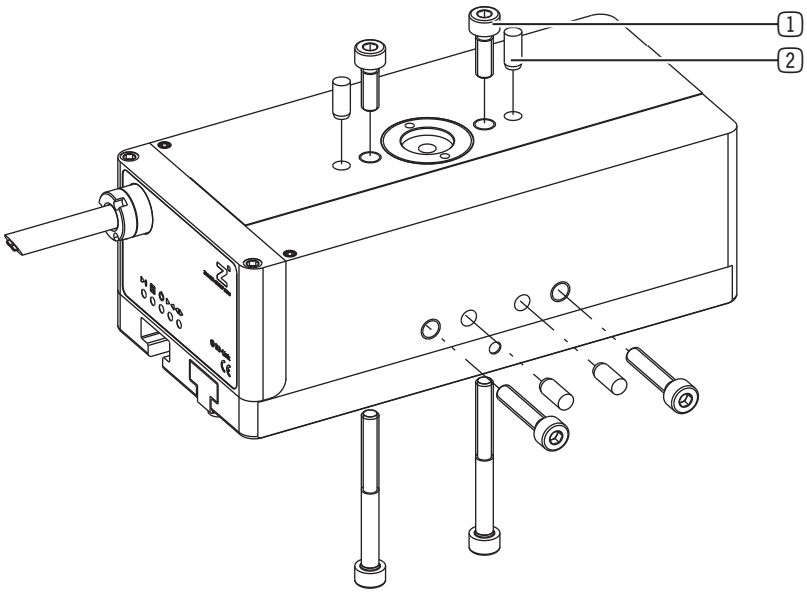

GED6000

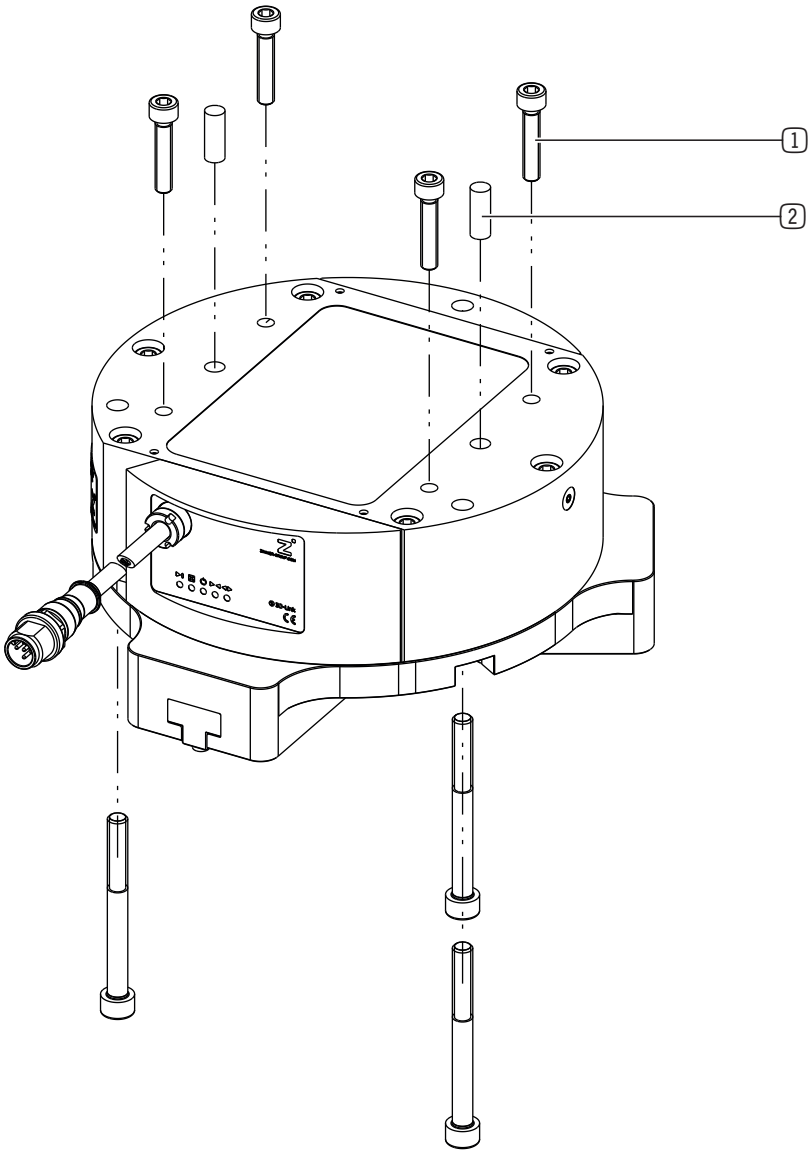

1 Mounting screw

2 Straight pins

10.2 Safe shutoff for products with IO-Link

10.2.1 Without an STO cable

INFORMATION

For safe shutoff for products with IO-Link, two contactors with one auxiliary contact each are switched in series. Here, the auxiliary contacts monitor the status of the contactors. If one contactor does not switch, the second contactor ensures safety. The malfunction can still be detected with the contacts.

INFORMATION

Without an externally fed voltage supply, the motor of the product cannot carry out an active movement and thus cannot carry out a hazardous movement.

There is no galvanic separation between the two voltage supplies (signal and power). There is a low-voltage connection via the GND connection.

Because of the self-locking mechanism, the product remains in the last approached position, even if no voltage is supplied.

The following figure shows the example of a circuit through which the IO-Link master cannot conduct the actuator current of the product.

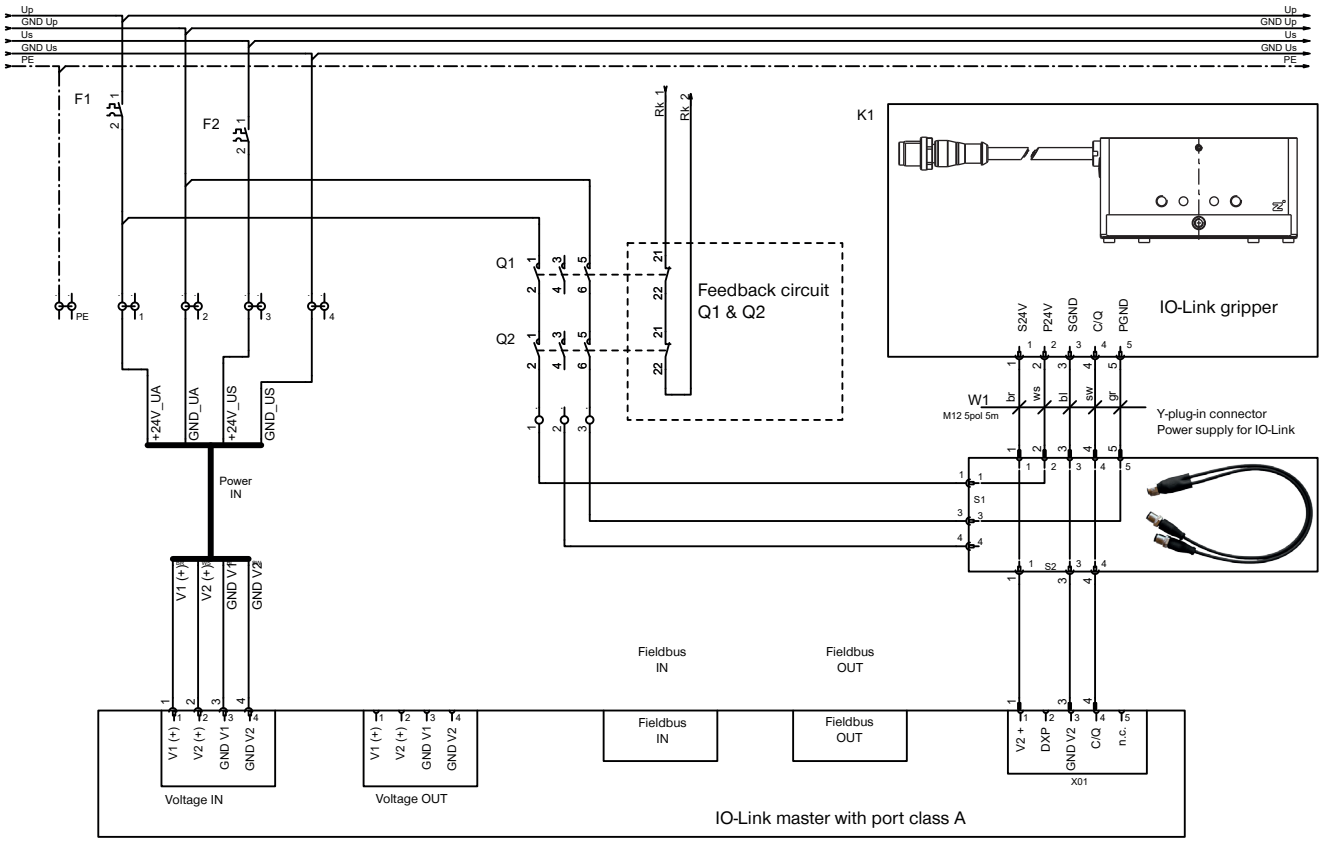

10.2.2 With an STO cable

INFORMATION

In order to put the gripper into a safe STO status, the STO can be shut off exclusively or together with the power supply. The STO switching unit, e.g. safety PLC or PNOZ, always switches Pin 1 and Pin 4 synchronously (see section "Installing the power supply").

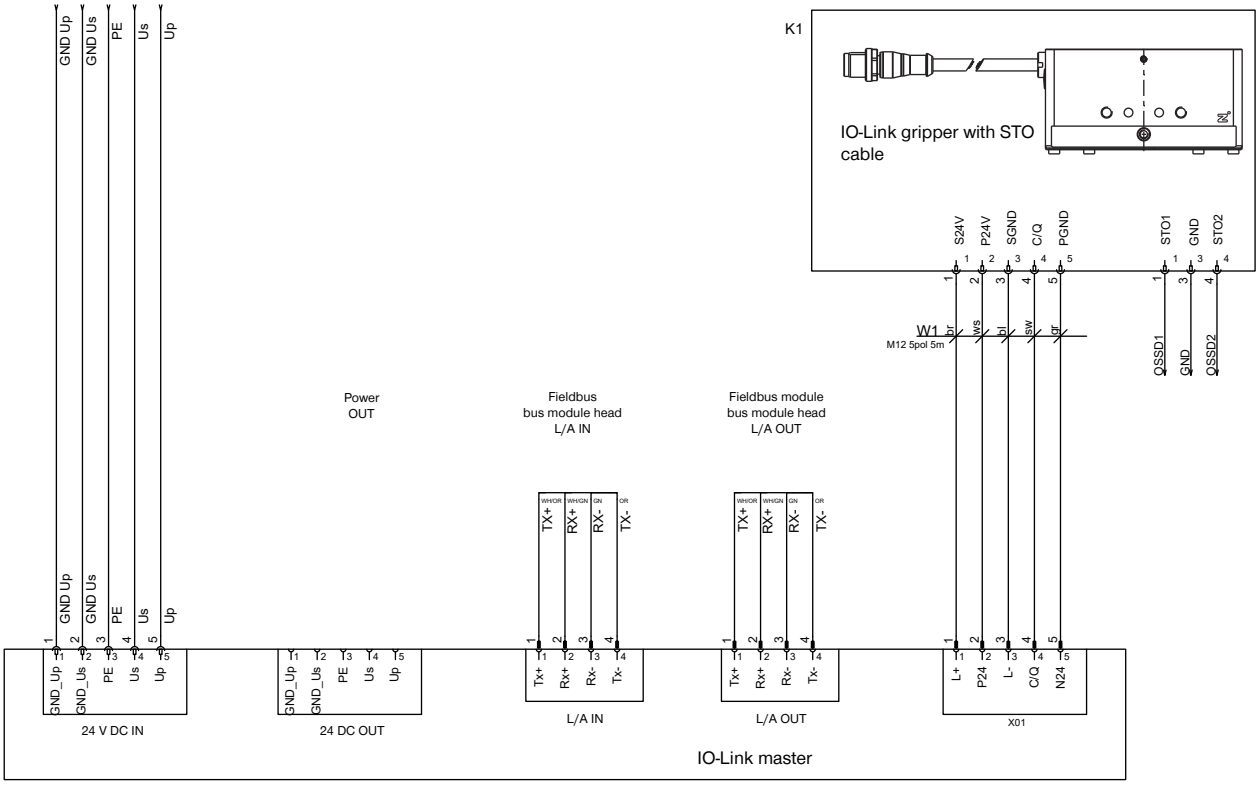

INFORMATION

- ► Connect the STO signals to the safety relay as follows in order to detect an error in the external switchgear in the form of an electrically conductive bridge:
  - STO1 to OSSD1
  - STO2 to OSSD2

INFORMATION

Self-locking products come to a stop immediately. Despite the torque-free motor, dangerous movements can no longer occur because the torque is safely switched off by the STO function.

10.3 Installing the energy supply

NOTICE

Destruction of the product

In the event that the polarity of the product is reversed, the IO-Link chip may be destroyed as a result of the duration of current of the C/Q (pin 4) being too long.

- ▶ Connect the product according to its assignment diagram.

NOTICE

Material damage and malfunction in case of non-compliance

The cable mounted on the product can be subjected to a torsional angle of +50°.

- ▶ Do not route the cable so that it is strained.
- ▶ You must meet the minimum bending radius of 10x the outer diameter.
- ▶ Secure free-hanging cables to prevent excessive motion loads or pinching.
- ▶ The contacts of the energy supply must be dry, clean and undamaged at all times.

▶ Connect the power supply cable to the control system of the product.

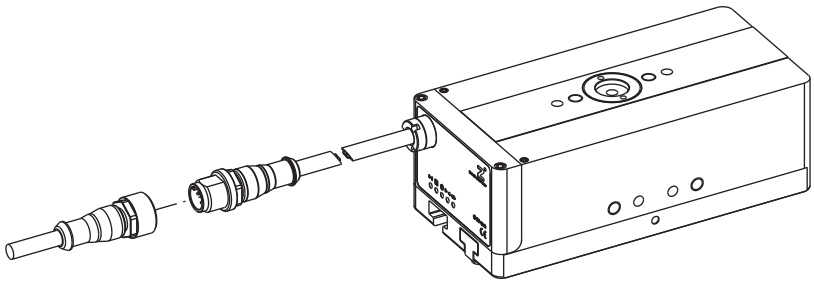

10.3.1 Pin assignment

INFORMATION

IO-Link Version 1.1.

Transmission speed: COM3 (230.4 kBaud).

INFORMATION

- ▶ Note the deviation from IO-Link Port Class B: There is no galvanic separation between the actuator and sensor voltage in the product.

An optional B12 Y-plug-in connector allows electrical isolation from the perspective of the IO-Link master.

Pin	Color	Function	Explanation	Plug, M12
1	Brown	24 V DC sensor	24 V DC supply voltage for IO-Link communication	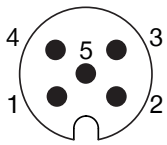
2	White	PWR actuator	24 V DC supply voltage for actuator	
3	Blue	GND sensor	0 V DC supply voltage for IO-Link communication	
4	Black	C/Q	IO-Link communication	
5	Gray	GND actuator	0 V DC supply voltage for actuator	

- ▶ Connect the product to the IO-Link master.
- ▶ Switch on the voltage supply.
- ▶ Configure the IO-Link master (see the chapter "Commissioning").

10.3.2 Pin assignment of the Y plug-in connector

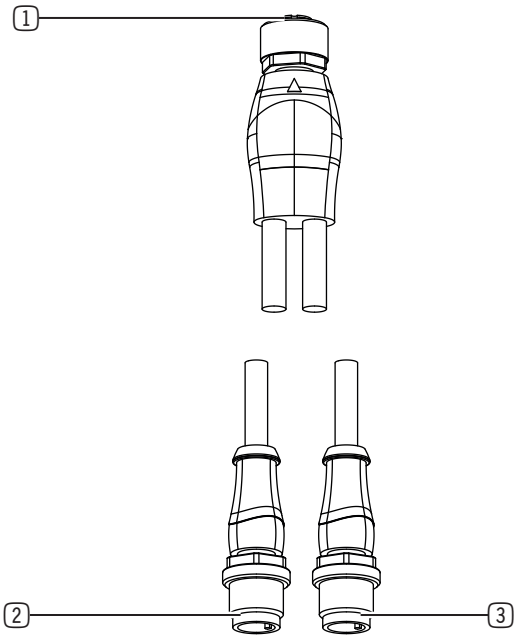

1 Socket

2 Plug 1

3 Plug 2

Pin	Color	Function	Explanation	Socket, M12
1	Brown	24 V DC sensor	24 V DC supply voltage for IO-Link communication	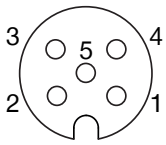
2	White	PWR actuator	24 V DC supply voltage for actuator	
3	Blue	GND sensor	0 V DC supply voltage for IO-Link communication	
4	Black	C/Q	IO-Link communication	
5	Gray	GND actuator	0 V DC supply voltage for actuator	

Pin	Color	Function	Explanation	Plug 1, M12
1	Brown	PWR actuator	24 V DC supply voltage for actuator	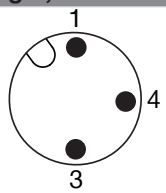
3	Blue	GND actuator	0 V DC supply voltage for actuator	
4	Black	-	-	

Pin	Color	Function	Explanation	Plug 2, M12
1	Brown	24 V DC sensor	24 V DC supply voltage for IO-Link communication	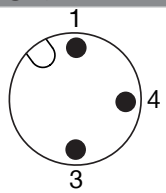
3	Blue	GND sensor	0 V DC supply voltage for IO-Link communication	
4	Black	C/Q	IO-Link communication	

10.3.3 PIN assignment of the STO

Pin	Color	Function	Explanation	Plug, M8
1	Brown	STO1	Control input 1	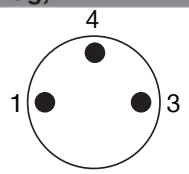
3	Blue	STO RET	0 V STO ground	
4	Black	STO2	Control input 2	

► Wire the product to the STO line.
► Connect the STO1 and STO2 signals at the same time using the identical voltage level (0 V or 24 V).
⇨ Failure to observe this will result in the product switching to a safe state and signaling diagnostic = 0x0100.
⇨ The product cannot be moved any more without a cold start because a so-called fatal error is present.

10.4 Wiring

The product is in a safe state if both STO signals have the status FALSE (0 V). The STO circuit in the product is interrupted.
► To move the product again, set both STO signals to the status of "TRUE" (24 V).
⇨ The diagnostics of the product change to 0x0001 (Motor switched off) if the wiring is correct.
► Switch on the motor.
► Select the desired DeviceMode and transfer it.
► Start the movement.

10.5 Static charge

NOTICE

Material damage from static charge

Electrostatic voltages can occur if the product is mounted on insulating surfaces and no effective dissipation of static charges is possible.

- ► Please note that ESD-sensitive parts can be damaged if they come into contact with the product.
- ► Ground the product for applications that require high EMC resistance.

10.6 Heat dissipation

NOTICE

Material damage from overheating of the product

If the product is operated under a very high ambient temperature or with fast clock cycles on an ongoing basis, this can reduce its service life.

- ► If the product is exposed to high ambient temperatures, always install it on heat-conducting materials.
- ► Reduce the load with increasing temperature.

10.7 Installing accessories

NOTICE

Non-compliance may result in material damage.

- ► Before installing an accessory, make sure it is suitable for use with the selected variant.
- ► You can find information on our website.
- ► Please contact Customer Service if you have any questions.

11 Commissioning

WARNING

Suspended loads can cause injury

Falling loads can cause severe injuries.

► Always keep an adequate safety distance from suspended loads.

CAUTION

Reduction of the gripping force can cause injury and material damage

When flexible components are gripped, the gripping force of the product is reduced.

Reduced gripping force can cause injuries or material damage because the components can no longer be securely gripped and transported.

► Always keep an adequate safety distance from suspended loads.

NOTICE

Malfunction in case of non-compliance

► Note the correct setting of the gripping force and the selection of the gripper finger length to prevent the gripper jaws from tensioning.

11.1 Process data

There is an option to control the product only with the process data that is transmitted in each cycle.

Process data output	Data type
ControlWord	UINT16
DeviceMode	UINT8
WorkpieceNo	UINT8
Reserve	UINT8
PositionTolerance	UINT8
GripForce	UINT8
DriveVelocity	UINT8
BasePosition	UINT16
ShiftPosition	UINT16
TeachPosition	UINT16
WorkPosition	UINT16

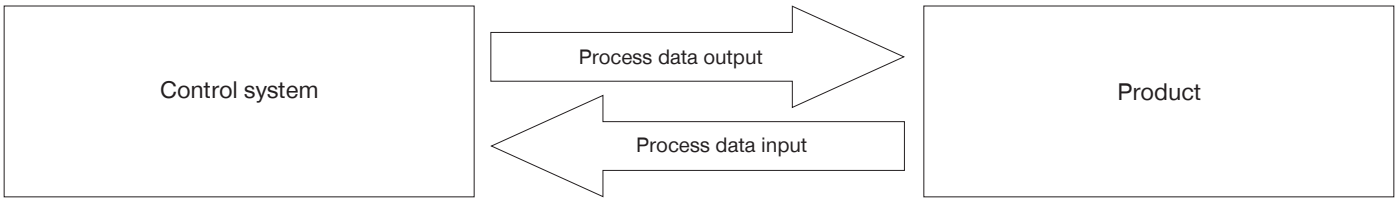

Process data input	Data type
StatusWord	UINT16
Diagnosis	UINT16
ActualPosition	UINT16

11.2 IODD Import

INFORMATION

The product is controlled via IO-Link by means of the cyclical process data as well as the acyclic service data with a cycle time of 10 ms.

► You must check the process data.

► Import the IODD (device description) into the control system.

- ► Go to our website.
- ► Select the desired product.
- ► Download the corresponding .zip file via the Downloads section under IODD.

As soon as the hardware configuration is complete and the IO-Link connection to the product is established, data will be displayed in the process input data.

Some control systems demand a byte swap to bring this process data into a logical sequence.

► Look at bit 6 (GripperPLCActive) in the StatusWord to determine whether a byte swap is necessary.

- ► Determine whether bit 6 is active in the first or second byte of the StatusWord.
  - ⇨ Bit 6 is active in the first byte: The bytes already have the correct sequence.
    - ► Continue with the commissioning.
  - ⇨ Bit 6 is active in the second byte:
    - ► Apply a byte swap (see the section “StatusWord”).

11.3 Data transmission via handshake

The transfer of process data to the product takes place with what is referred to as a handshake. All process data described in the following sections must be transferred with the handshake.

► Send the ControlWord = 0x0001 to the product.

⇨ The data transfer has been started.

► Check the response of the product by using StatusWord.12 (DataTransferOK) = TRUE.

⇨ The product is ready to operate.

► Send the ControlWord = 0x0000 to stop the data transfer.

⇨ The data transfer is complete when the product sends back StatusWord.12 = FALSE.

INFORMATION

► For examples, refer to the "Quickstart Basic Parameters" section.

11.4 Parameters

11.4.1 ControlWord

NOTICE

Malfunction in case of non-compliance

For ControlWord, only one single bit or the value 0 may be set at a time.

▶ Only use the values listed in the following table.

Parameter	Decimal value	Hexadecimal value
DataTransfer	1	0x0001
WritePDU	2	0x0002
ResetDirectionFlag	4	0x0004
Teach	8	0x0008
MoveToBase	256	0x0100
MoveToWork	512	0x0200
JogToWork +	1024	0x0400
JogToBase -	2048	0x0800

Data type	UINT16
Permission	Write
Transfer	Cyclical
Value range	0 - 65535

	Bit 15	Bit 14	Bit 13	Bit 12	Bit 11	Bit 10	Bit 9	Bit 8
Byte 1	-	-	-	-	JogToBase	JogToWork	MoveToWork	MoveToBase
	Bit 7	Bit 6	Bit 5	Bit 4	Bit 3	Bit 2	Bit 1	Bit 0
Byte 2	-	-	-	-	Teach	ResetDirec-tionFlag	WritePDU	DataTransfer

Bit 0: DataTransfer

Setting this bit causes the product to acquire the data transmitted in the process data ("WorkpieceNo" = 0) or the data stored in the workpiece data ("WorkpieceNo" = 1 to 32) as the active data set.

Setting this bit tells the product that the direction flag needs to be reset. This function is available starting from Application Firmware Version SWA000059_P00 (see section “Table of acyclic data (ISDU)” Index 0x0017).

Bit 1: WritePDU

Setting this bit tells the product that the current process data should be written to the selected tool recipe.

Bit 2: ResetDirectionFlag

Setting this bit tells the product that the direction flag needs to be reset. This makes a repeated movement to a position possible. This is logical during a switchover of workpiece recipes.

NOTICE

Material damage from overheating of the product

▶ Please note that the product can be damaged from overheating due to repeated, prompt movement to the end stop or with a gripped workpiece.

Bit 3: Teach

Setting this bit tells the product that the current position should be saved as the TeachPosition in the selected WorkpieceNo. This only works if there is no "0" that is transmitted in the workpiece number.

Bit 8: MoveToBase

Setting this bit tells the product to move toward the BasePosition.

Bit 9: MoveToWork

Setting this bit tells the product to move toward the WorkPosition.

Bit 10: JogToWork

Setting this bit in the ControlWord puts the product in jog mode and the jaws move toward the WorkPosition. Resetting this bit stops the jaws.

Bit 11: JogToBase

Setting this bit in the ControlWord puts the product in jog mode and slowly moves the jaws toward the BasePosition. Resetting this bit stops the jaws.

11.4.2 DeviceMode

The DeviceMode parameter can be used to control the movement of the gripper jaws and the adaptation to the workpiece. For this purpose, various basic modes and movement profiles are available.

Data type	UINT8
Permission	Write
Transfer	Cyclical
Value range	0 to 255

INFORMATION

▶ Note that different operating modes are available depending on the product, (see chapter "Movement profiles for the GEH6xxxIL-03-B/GED6xxxIL-03-A" and "Movement profiles for the GEH6xxxIL-31-B/GED6xxxIL-31-A").

These modes control the basic product actions.

DeviceMode	Description	ControlWord
0	Not sent to the motor control system.	dc
1	**Idle:** In this mode, no movement can be carried out (idle command).	0x0001
2	**Gripper reset**: A reset of the motor controller is triggered in this mode.	0x0001
3	**Switch on the motor control**: The motor control is switched on and the output stage is activated. The movement is started after a move command is issued.	0x0001
5	**Switch off the motor control**: The motor control is switched off and the output stage is activated. All movements of the product are stopped.	0x0001
11	**Jog mode**: The product is in jog mode and moves slowly in the selected direction as long as the respective bit is active in the ControlWord. Revoking the move command results in an immediate standstill of the product. This mode can be used for setting up the gripper positions.	0x0400/0x0800

11.4.3 WorkpieceNo

The workpiece number is used for selecting the previously stored workpiece data, as well as for selecting the WorkpieceNo data record in which the current process data is stored.

WorkpieceNo enables individual workpieces to be taught in to the product very quickly if the recipes are not managed on the control system.

With a value > 0 and data acquisition via a handshake, the corresponding workpiece recipe is loaded in the product.

INFORMATION

▶ You can find example codes in the sections “Quickstart Basic Parameters” and “Recipe Examples”.

Data type	UINT8
Permission	Write
Transfer	Cyclical
Value range	0 - 32

11.4.4 PositionTolerance

The TeachPosition notifies the product of the expected position of the workpiece.

The PositionTolerance defines the tolerance range around the TeachPosition.

They are used to configure the position tolerance with a resolution of 0.01 mm.

Thus, the value range of 0 to 255 can be used to set a maximum tolerance of 2.55 mm in both directions.

INFORMATION

Example:

For TeachPosition 1200 (12 mm), PositionTolerance 150 lets you set a tolerance of 1.5 mm in both directions.

This means that the TeachPosition range starts at 10.5 mm and goes up to 13.5 mm.

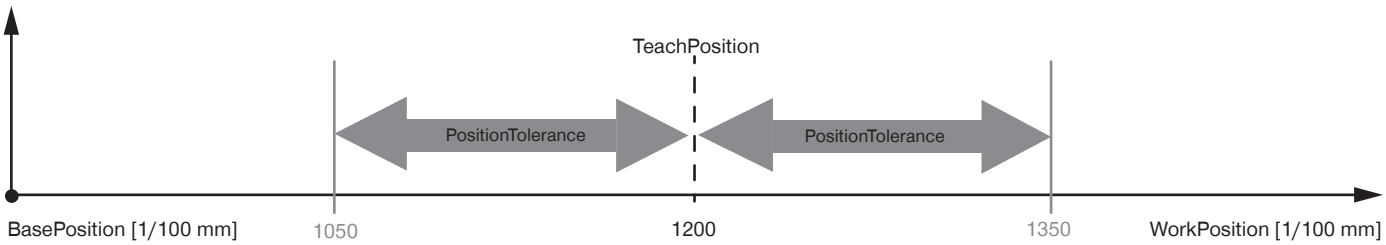

Data type	UINT8
Permission	Write
Transfer	Cyclical
Value range	0 to 255

11.4.5 GripForce

The product can use various gripping forces for an optimized process sequence. The gripping force is indicated as a percent from the minimum to the maximum gripping force. The user can transmit the required gripping force in increments of 1%.

Data type	UINT8
Permission	Write
Transfer	Cyclical
Value range	1 to 100 %

NOTICE

Malfunction in case of non-compliance

For the products GEH6000IL-03 and GED6000IL-03, operation up to 130% gripping force is possible. During this process, the product switches to a higher maximum permitted peak current.

► Please note that the product may jam depending on the shape of the gripper fingers.

11.4.6 DriveVelocity

The product can work at various movement speeds for an optimized process sequence.

This parameter determines the movement speed of the gripper jaws in both directions in PositionProfile.

In the other modes, this parameter determines the movement speed from the workpiece.

In PrePosition-ForceProfile mode, it determines the movement speed to the switching position.

The positioning speed is specified as a percentage value (1% to 100%). The product converts this information to its maximum movement speed.

INFORMATION

Example:

To set a movement speed of 75%, a value of 75 must be transmitted.

Data type	UINT8
Permission	Write
Transfer	Cyclical
Value range	1 to 100 %

11.4.7 BasePosition

The BasePosition defines the target position in the MoveToBase direction. It must always be less than the ShiftPosition.

The product verifies this and, if necessary, displays an error message.

If the current position of the jaws is within the tolerance range in the vicinity of the BasePosition, bit 8 is set in the StatusWord.

In the PositionProfile, this position is precisely approached because the product is in positioning mode.

In DeviceModes 7x and 9x, the jaws are stopped from this position. Depending on the movement speed and gripper finger dimensions, the jaws overrun the BasePosition by a maximum of 2 mm.

► Select an appropriately large distance to the end stop.

Data type	UINT16
Permission	Write
Transfer	Cyclical
Value range	0.75 to max. jaw stroke of the product + 0.75 mm

11.4.8 ShiftPosition

The ShiftPosition must always be larger than the BasePosition and smaller than the WorkPosition.

The product verifies this and, if necessary, displays an error message.

The input is on a scale of 1/100 mm (Example: 1000 = 10 mm).

Data type	UINT16
Permission	Write
Transfer	Cyclical
Value range	0.75 to max. jaw stroke of the product + 0.75 mm

11.4.9 TeachPosition

The TeachPosition notifies the product of the expected position of the workpiece.

The PositionTolerance defines the tolerance range around the TeachPosition.

The StatusWord notifies the control system of whether the correct workpiece has been gripped.

If the jaws are within the tolerance range in the vicinity of the TeachPosition, bit 9 is set in the StatusWord.

The input is on a scale of 1/100 mm (Example: 1000 = 10 mm).

Data type	UINT16
Permission	Write
Transfer	Cyclical
Value range	0.75 to max. jaw stroke of the product + 0.75 mm

11.4.10 WorkPosition

The WorkPosition defines the maximum travel path of the product and has to be greater than the ShiftPosition.

If the gripper jaws are within the tolerance range in the vicinity of the WorkPosition, bit 10 is set in the StatusWord.

In the PositionProfile, this position is precisely approached because the product is in positioning mode.

In DeviceModes 6x and 8x, the jaws are stopped from this position. Depending on the movement speed and gripper finger dimensions, the jaws overrun the WorkPosition by a maximum of 2 mm.

► Select an appropriately large distance to the end stop.

Data type	UINT16
Permission	Write
Transfer	Cyclical
Value range	0.75 to max. jaw stroke of the product + 0.75 mm

11.4.11 StatusWord

	Bit 15	Bit 14	Bit 13	Bit 12	Bit 11	Bit 10	Bit 9	Bit 8
Byte 1	Error	ControlWord 0x0200	ControlWord 0x0100	DataTransferOK	UndefinedPo-sition	WorkPosition	TeachPosition	BasePosition
	Bit 7	Bit 6	Bit 5	Bit 4	Bit 3	Bit 2	Bit 1	Bit 0
Byte 0	-	Gripper-PLCActive	JogWork-Active +	JogBase-Active -	Movement-Complete	InMotion	MotorON	HomingPo-sition OK

Data type	UINT16
Permission	Read
Transfer	Cyclical
Value range	0 - 65535

Bit 0: HomingPosition OK

The product has its reference. This bit is mandatory. If the reference run is FALSE, a new reference run must be carried out (see the chapter "Referencing by Homing").

Bit 1: MotorON

This bit becomes TRUE when the motor is switched on.

Bit 2: InMotion

This bit is active during the run.

Bit 3: MovementComplete

This bit is active after the movement is complete.

Bit 4: JogBaseActive -

This bit provides feedback during travel in the direction of the BasePosition.

Bit 5: JogWorkActive +

This bit provides feedback during travel in the in the direction of the WorkPosition.

Bit 6: GripperPLCActive

Active as soon as the product has booted up after the cold boot.This bit can be used to verify a “byte swap."

Bit 8: BasePosition

Active if the product is set to BasePosition.

Bit 9: TeachPosition

Active if the product is set to TeachPosition.

Bit 10: WorkPosition

Active if the product is set to WorkPosition.

Bit 11: UndefinedPosition

Active if the product is not set to TeachPosition, WorkPosition or BasePosition.

Bit 12: DataTransferOK

This bit is used for data transmission with the handshake. Active as soon as the product has taken over the data with the parameter ControlWord 1 (decimal).

Bit 13: ControlWord 0x0100

This bit is a direction flag. Active if the last motion task was carried out toward BasePosition.

Bit 14: ControlWord 0x0200

This bit is a direction flag. Active if the last motion task was carried out toward WorkPosition.

Bit 15: Error

Active if the product has an active error. The error message can be determined using Diagnosis.

11.4.12 Diagnosis

The value returned in Diagnosis corresponds to the error code (see "Error Diagnosis" section).

Data type	UINT16
Permission	Read
Transfer	Cyclical
Value range	0 - 65535

11.4.13 ActualPosition

ActualPosition is the current position of the gripper jaws.

The value is specified with a resolution of 0.01 mm.

The values can move between the BasePosition (minimum values) and the WorkPosition (maximum values).

With the position measuring system, it is possible to achieve a position accuracy of ± 0.05 mm.

Data type	UINT16
Permission	Read
Transfer	Cyclical
Value range	0 to max. jaw stroke of the product

INFORMATION

- ▶ Use the StatusWord to check whether a workpiece has been gripped correctly.
- The position measurement resolution is 0.01 mm.
- The position measurement accuracy is 0.1 mm.
- ▶ During commissioning, be aware of fluctuations around the exact value if you use ActualPosition to detect the workpiece.

11.5 Cold start

For proper function, Zimmer Group GmbH recommends that the actuator and sensor voltage be supplied with power separately.

- ► Switch on the sensor voltage.
- ► Switch on the actuator voltage as soon as the product communicates with the control system.

Depending on the application, simultaneous activation of both voltages is possible.

INFORMATION

If the sensor voltage is disconnected, the C/Q signal (IO-Link) must be disconnected as well.

11.6 Minimum travel path

The product requires a certain minimum travel path to move to the desired position.

11.7 Minimum positioning path

The product requires a certain minimum positioning path to reach the desired gripping force.

INFORMATION

- ► You can find the information in the technical data sheet on our website.
- ► Please contact Customer Service if you have any questions.

11.8 Referencing by Homing

NOTICE

Malfunction in case of non-compliance

If the jaws hit a resistance, the reference position is set.

- ► Before each homing command, make sure that the gripper jaws move smoothly and are not blocked.
- ► Please note that a homing command is not permitted in the gripped state.

INFORMATION

There are various homing commands available.

DeviceModes 16 and 17 are not valid for products with safety gripper jaws!

DeviceMode	Action
10	Homing outside: Gripper jaws move to internal end stop (see section “DeviceMode 10”)
14	Homing inside: Gripper jaws move to internal end stop (see section “DeviceMode 14”)
16	Special homing outside: Gripper jaws move to external end stop (see section “DeviceMode 16”)
17	Special homing inside: Gripper jaws move to external end stop (see section “DeviceMode 17”)

The product has reached its zero position if the gripper jaws are at the pictured position when referencing with DeviceMode 10.

Depending on installation size, the gripper jaws move slightly beyond the edge of the gripper housing when moving to the home position.

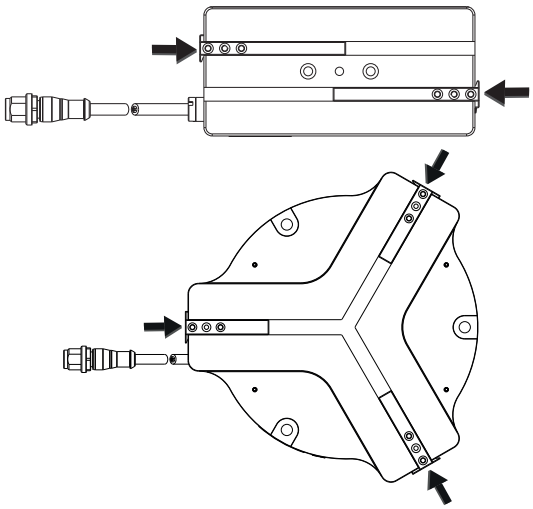

11.8.1 DeviceMode 10

WARNING

Risk of injury due to uncontrolled movements

Transmitting the value might cause the product to move.

- ▶ Always keep an adequate safety distance.
- ▶ Do not reach into the operational range of the product.

- ▶ Assign "DeviceMode 10.
- ▶ Transmit this value to the product with a handshake.
  - The motor can be switched on or off.

- ⇨ The motor is switched on.
- ⇨ The gripper jaws move to the outside at low speed until they encounter the internal end stops.
- ⇨ If the gripper jaws encounter resistance, they stop at this spot.
  - ⇨ In the process, the ActualPosition is referenced to the value of 0.

INFORMATION

For variants GEH6xxxIL-31-B and GED6xxxIL-31-A, the ActualPosition can also take on a value higher than 0 after homing.

11.8.2 DeviceMode 14

WARNING

Risk of injury due to uncontrolled movements

Transmitting the value might cause the product to move.

- ▶ Always keep an adequate safety distance.
- ▶ Do not reach into the operational range of the product.

- ▶ Assign DeviceMode 14.
- ▶ Transmit this value to the product with a handshake.
  - The motor can be switched on or off.

- ⇨ The motor is switched on.
- ⇨ The gripper jaws move to the inside at low speed until they encounter the internal end stops.
- ⇨ If the gripper jaws encounter resistance, they stop at this spot.
  - ⇨ In the process, the ActualPosition is referenced to the maximum jaw stroke of the product.

INFORMATION

For the product variants GEH6xxxIL-31-B and GED6xxxIL-31-A, the ActualPosition can be less than the maximum position after homing.

11.8.3 DeviceMode 16

WARNING

Risk of injury due to increased force of the product during homing

The product force during the reference run is very high with DeviceMode 16.

- ▶ Do not reach into the operational range of the product.
- ▶ Please note that if the internal end stop of the product is used, this will result in higher wear.
- ▶ Make sure that an external end stop is installed in the machine or system into which the product is being installed.

▶ Set the DriveVelocity to a low value before starting homing.
- Recommendation: DriveVelocity **10**
- ▶ Increase the value if a higher force is required for homing.

▶ Assign DeviceMode 3.

▶ Transmit this value to the product with ControlWord 1.

⇨ The motor is switched on.

▶ Transmit the following values.

Parameter	Value	Unit
DeviceMode	16	-
WorkpieceNo	0	-
PositionTolerance	50	0.01 mm
DriveVelocity	**10**	%
BasePosition	**100**	0.01 mm
WorkPosition	4000	0.01 mm

▶ Transmit the parameters to the product with a handshake.
- ControlWord 1
- BasePosition must not be smaller than 75.

⇨ The gripper jaws move to the outside until they encounter the internal end stops.
- ⇨ After reaching the end stops, the product accepts the value of the BasePosition as the new ActualPosition.

⇨ For example, the new ActualPosition would be 100 (see table).

⇨ After homing, the motor is switched off.
- ▶ Switch the motor on using DeviceMode 3 and the handshake.
- ▶ Change the movement profile.
- ▶ Start the operation.

⇨ The product responds with DiagnosisWord 0x0000.
- ⇨ The product is ready.

WARNING

Risk of injury and material damage in case of non-compliance

Since the ActualPosition in this DeviceMode has an offset, the product does not know the position of the internal end stop. As a result, the gripper jaws can be moved toward the internal end stop at a high speed.

- ▶ Please note that the gripper jaws can jam when moving to the end stop and the product can become damaged.
- ▶ Make sure that an external end stop is installed in the machine or system into which the product is being installed.

INFORMATION

For the variants GEH6xxxIL-31-B and GED6xxxIL-31-A, the ActualPosition can be greater than the specified BasePosition after homing.

11.8.4 DeviceMode 17

WARNING

Risk of injury due to increased force of the product during homing

The product force during the reference run is very high with DeviceMode 17.

- ▶ Do not reach into the operational range of the product.
- ▶ Please note that if the internal end stop of the product is used, this will result in higher wear.
- ▶ Make sure that an external end stop is installed in the machine or system into which the product is being installed.

▶ Set the DriveVelocity to a low value before starting homing.
- Recommendation: DriveVelocity **10**
- ▶ Increase the value if a higher force is required for homing.

▶ Assign DeviceMode 3.

▶ Transmit this value to the product with ControlWord 1.

⇨ The motor is switched on.

▶ Transmit the following values.

Parameter	Value	Unit
DeviceMode	17	-
WorkpieceNo	0	-
PositionTolerance	50	0.01 mm
DriveVelocity	**10**	%
BasePosition	100	0.01 mm
WorkPosition	**4000**	0.01 mm

▶ Transmit the parameters to the product with a handshake.
- ControlWord 1
- WorkPosition must not be greater than the maximum position.

⇨ The gripper jaws move inward until they are stopped by an external end stop or the maximum jaw position.
- ⇨ The product takes over the WorkPosition value as the new ActualPosition.

⇨ For example, this would be the new ActualPosition **4000** (see table).

⇨ After homing, the motor is switched off.
- ▶ Switch the motor on using DeviceMode 3 and the handshake.
- ▶ Change the movement profile.
- ▶ Start the operation.

⇨ The product responds with DiagnosisWord 0x0000.
- ⇨ The product is ready.

WARNING

Risk of injury and material damage in case of non-compliance

Since the ActualPosition in this DeviceMode has an offset, the product does not know the position of the internal end stop. As a result, the gripper jaws can be moved toward the internal end stop at a high speed.

- ► Please note that the gripper jaws can jam when moving to the end stop and the product can become damaged.
- ► Make sure that an external end stop is installed in the machine or system into which the product is being installed.

INFORMATION

For the variants GEH6xxxIL-31-B and GED6xxxIL-31-A, the ActualPosition can be less than the specified WorkPosition after homing.

11.9 Movement profiles GEH6xxxIL-03-B/GED6xxxIL-03-A

Various operating modes are available for products with a self-locking mechanism.
Zimmer Group GmbH recommends operating modes 63 and 73 for standard operation.

11.9.1 DeviceMode

DeviceMode	Description
5x	**Positioning profiles**
50	Standard
51	High clock rate
6x	**Force profiles – Outside gripping**
60	Without holding pressure for energy-saving gripping
61	High clock rate for energy-saving gripping
63	With holding pressure for detecting part loss
64	With stronger holding pressure for detecting part loss
65	Without holding pressure for flexible/elastic components
7x	**Force profiles – Inside gripping**
70	Without holding pressure for energy-saving gripping
71	High clock rate for energy-saving gripping
73	With holding pressure for detecting part loss
74	With stronger holding pressure for detecting part loss
75	Without holding pressure for flexible/elastic components
8x	**Pre-positioning – Force profiles – Outside gripping**
80	Without holding pressure for energy-saving gripping
81	High clock rate for energy-saving gripping
84	With stronger holding pressure for detecting part loss
85	With holding pressure for detecting part loss
9x	**Pre-positioning – Force profiles – Inside gripping**
90	Without holding pressure for energy-saving gripping
91	High clock rate for energy-saving gripping
94	With stronger holding pressure for detecting part loss
95	With holding pressure for detecting part loss

11.9.2 Positioning profiles

Modes 50 and 51 can be used for positioning the jaws or for form-fit gripping.

The movement speed is configured using the DriveVelocity parameter.

The TeachPosition does not have any significance in this mode, because the BasePosition or WorkPosition is always approached precisely.

If the jaws encounter an obstacle in this mode, they stop and the product issues an error message.

The jaws can be moved from the obstacle to the starting position again if the command is switched in the ControlWord.

No defined gripping forces can be generated in this mode. As a result, friction-locked gripping is not permitted in this mode.

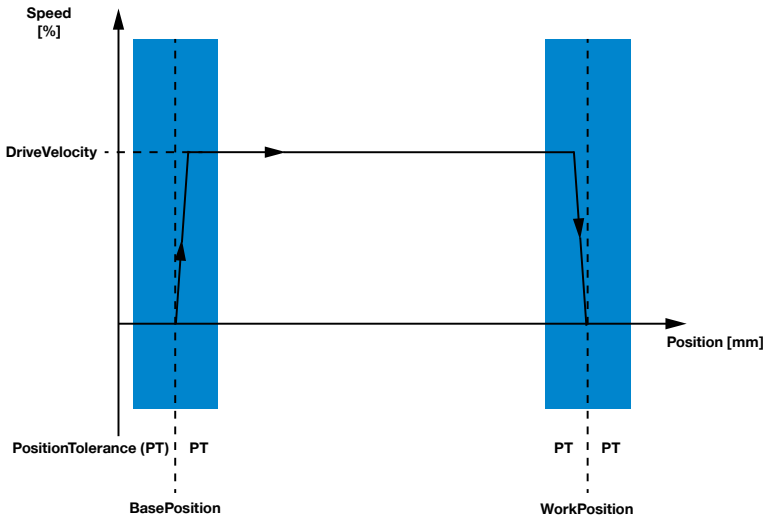

DeviceMode	Action	ControlWord
50	Positioning to BasePosition or WorkPosition	0x0100/0x0200
51	Positioning without an unlocking operation to BasePosition or WorkPosition	0x0100/0x0200

Positioning profile 50: Standard

The commands in the ControlWord trigger a movement in the corresponding direction at the selected DriveVelocity.

Positioning profile 51: High clock rate

Behaves like mode 50, but when the gripping movement starts, the unlocking operation is omitted. This enables a shorter response time.

► Ensure that no gripping force is acting on the gripper jaws.

⇨ The movement may stop as a result.

11.9.3 Force profiles

Mode Groups 60 and 70 can be used for form-fit gripping.

The gripping force is built up by the movement speed of the jaws and the motor current. The product automatically calculates the required GripVelocity from the GripForce parameter.

When gripping a workpiece, a mechanical locking system is triggered that makes it possible to hold the workpiece de-energized. To release the locking system, an unlocking operation must be carried out.

Gripping in the direction of WorkPosition

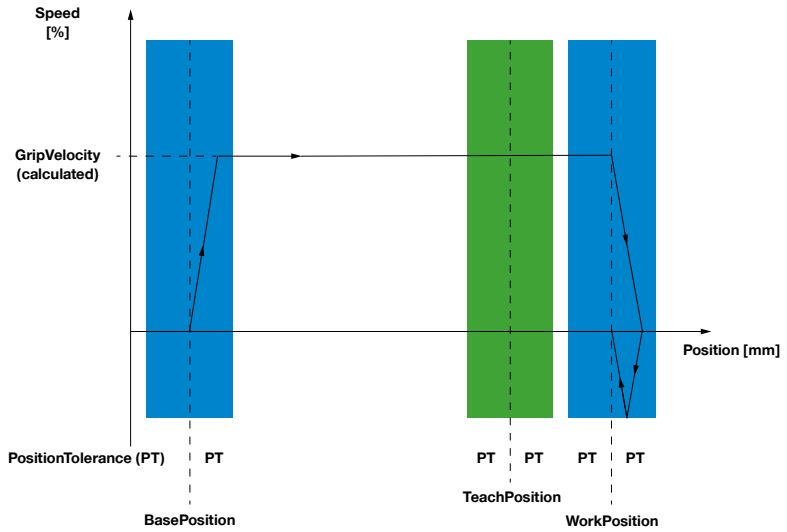

To unlock, the product must be moved toward the standby position at DriveVelocity. The product then switches into positioning mode.

The figure shows outside gripping using Mode Group 60 as an example. For Mode Group 70, the BasePosition and the WorkPosition are exchanged.

Open in the direction of BasePosition

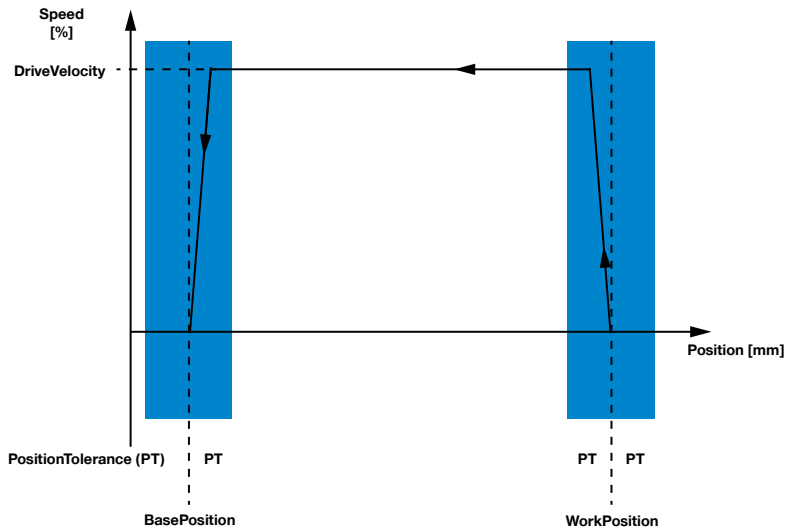

Parameter	Description
BasePosition	Position open
WorkPosition	Position closed
GripForce	Desired gripping force
TeachPosition	Expected position of the workpiece
PositionTolerance	Permitted tolerance for the workpiece
DriveVelocity	Opening speed
ShiftPosition	Not used

The movement profile determines the direction in which the workpiece is gripped:

- Outside gripping: Mode group 60
- Inside gripping: Mode group 70

11.9.3.1 Group 60: Outside gripping

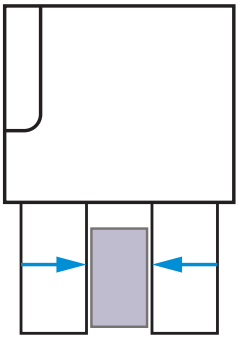

In Mode Group 60, the product moves in the ForceProfile from the BasePosition toward the WorkPosition onto the workpiece with ControlWord 0x0200.

The workpiece is gripped and the set gripping force is built up. The self-locking mechanism is activated automatically. For releasing, an unlocking operation must be carried out.

If no workpiece is gripped during the gripping process, the jaws move on to the WorkPosition and are braked. The jaws move past the set position before they turn around and come to a stop at the WorkPosition. This allows workpieces to be gripped securely up to the WorkPosition.
The ControlWord 0x0100 is used to open the jaws. The jaws are moved automatically to the BasePosition in the PositionProfile.

DeviceMode	Action	ControlWord
6x	Move toward the BasePosition to open the jaws.	0x0100
60	Move toward the WorkPosition until this position or the workpiece is reached.	0x0200
61	Move toward the WorkPosition until this position or the workpiece is reached. Do not carry out an unlocking process.	0x0200
63	Move toward the WorkPosition until this position or the workpiece is reached. Carry out test for part loss.	0x0200
64	Move toward the WorkPosition until this position or the workpiece is reached. Carry out test for part loss with stronger holding pressure force.	0x0200
65	Move toward the WorkPosition until this position or the workpiece is reached. Move at a reduced speed.	0x0200

Force profile 60: Without holding pressure for energy-saving gripping

Before the movement starts, an unlocking operation is run for releasing. Then, the gripper jaws start moving toward the workpiece. If the gripper jaws encounter the workpiece while moving, an increase in current is detected and the gripping force is built up. The self-locking mechanism is triggered automatically and the motor is practically de-energized.

If the workpiece disengages from the gripper, the gripper jaws do not follow along and no part loss can be detected.

This mode is the recommended energy saving mode.

Force profile 61: High clock rate for energy-saving gripping
Behaves like mode 60, but when the gripping movement starts, the unlocking operation is omitted and the movement is started immediately. This enables a shorter response time during the drive to the WorkPosition.

► Ensure that in the BasePosition, no external forces act on the gripper jaws.

Force profile 63: With holding pressure for detecting part loss
Behaves like force profile 60, but in this mode, the motor is energized continuously after gripping the workpiece. After the gripping process, the TeachPosition bit is TRUE. In case a part is lost, this causes the machine to move on to the WorkPosition. The part loss can be detected by sensing the WorkPosition.

This mode is the recommended standard operating mode.

Force profile 64: With stronger holding pressure for detection of part loss
Behaves like force profile 63, but the motor is energized with more current. This increases the holding pressure force, but the heating of the gripper and the energy consumption increase.

Force profile 65: Without holding pressure for flexible/elastic components
Behaves like force profile 60, but the product has a slower movement speed because the majority of the gripping force is created directly by the motor current. It will no longer be possible to generate the full nominal force in the movement because of the lower kinetic energy. The gripping force generated depends on the elasticity of the workpiece.

This mode is the recommended mode for flexible/elastic workpieces.

11.9.3.2 Group 70: Inside gripping

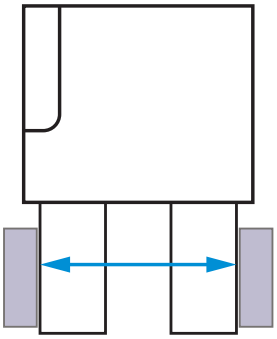

In Mode Group 70, the product in the ForceProfile moves from the BasePosition toward the WorkPosition onto the workpiece with ControlWord 0x0100.

The workpiece is gripped and the set gripping force is built up. The self-locking mechanism is activated automatically. For releasing, an unlocking operation must be carried out.

If no workpiece is gripped during the gripping process, the jaws move on to the BasePosition and are braked. The jaws move past the set position before they turn around and come to a stop at the BasePosition. This allows workpieces to be gripped securely up to the BasePosition.
The ControlWord 0x0200 is used to open the jaws. The jaws are moved automatically to the WorkPosition in the PositionProfile.

DeviceMode	Action	ControlWord
7x	Move toward the WorkPosition to open the jaws.	0x0200
70	Move toward the BasePosition until this position or the workpiece is reached.	0x0100
71	Move toward the BasePosition until this position or the workpiece is reached. Do not carry out an unlocking process.	0x0100
73	Move toward the BasePosition until this position or the workpiece is reached. Carry out test for part loss.	0x0100
74	Move toward the BasePosition until this position or the workpiece is reached. Carry out test for part loss with stronger holding pressure force.	0x0100
75	Move toward the BasePosition until this position or the workpiece is reached. Move at a reduced speed.	0x0100

Force profile 70: Without holding pressure for energy-saving gripping
When the movement starts, an unlocking operation is run for releasing. Then, the gripper jaws start moving toward the workpiece. If the gripper jaws encounter the workpiece while moving, an increase in current is detected and the gripping force is built up. The self-locking mechanism is triggered automatically and the motor is practically de-energized.

If the workpiece disengages from the gripper, the gripper jaws do not follow along and no part loss can be detected.

⇨ This mode is the recommended energy saving mode.

Force profile 71: High clock rate for energy-saving gripping
Behaves like mode 70, but when the gripping movement starts, the unlocking operation is omitted and the movement is started immediately. This enables a shorter response time during the drive to the BasePosition.

► Ensure that in the WorkPosition, no external forces act on the gripper jaws.

Force profile 73: With holding pressure for detecting part loss
Behaves like force profile 70, but in this mode, the motor is also energized continuously after gripping the workpiece. After the gripping process, the TeachPosition bit is TRUE. In case a part is lost, this causes the machine to move on to the BasePosition. The part loss can be detected by sensing the BasePosition.

⇨ This mode is the recommended standard operating mode.

Force profile 74: With stronger holding pressure for detection of part loss
Behaves like force profile 73, but the motor is energized with more current. This increases the holding pressure force, but the heating of the gripper and the energy consumption also increase.

Force profile 75: Without holding pressure for flexible/elastic components
Behaves like force profile 70, but the product has a slower movement speed because the majority of the gripping force is created directly by the motor current. It will no longer be possible to generate the full nominal force in the movement because of the lower kinetic energy. The gripping force generated depends on the elasticity of the workpiece.

⇨ This mode is the recommended mode for flexible/elastic workpieces.

11.9.3.3 Pre-positioning force profiles

For Mode Groups 80 and 90, pre-positioning is used. Therefore, these groups are particularly suitable for time-optimized gripping with long strokes followed by force-fit gripping.

The gripping force is built up by the movement speed of the jaws and the motor current. The product automatically calculates the required GripVelocity from the GripForce parameter.

When gripping a workpiece, a mechanical locking system is triggered that makes it possible to hold the workpiece de-energized. To release the locking system, an unlocking operation must be carried out.

Gripping in the direction of WorkPosition

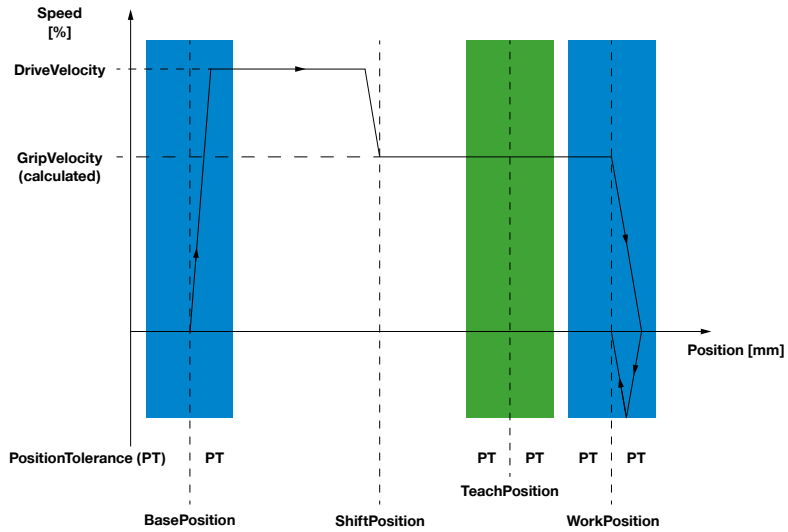

To unlock, the product must be moved toward the standby position at DriveVelocity. The product then switches into positioning mode.

The figure shows outside gripping using Mode Group 80 as an example. For Mode Group 90, the BasePosition and the WorkPosition are exchanged.

Open in the direction of BasePosition

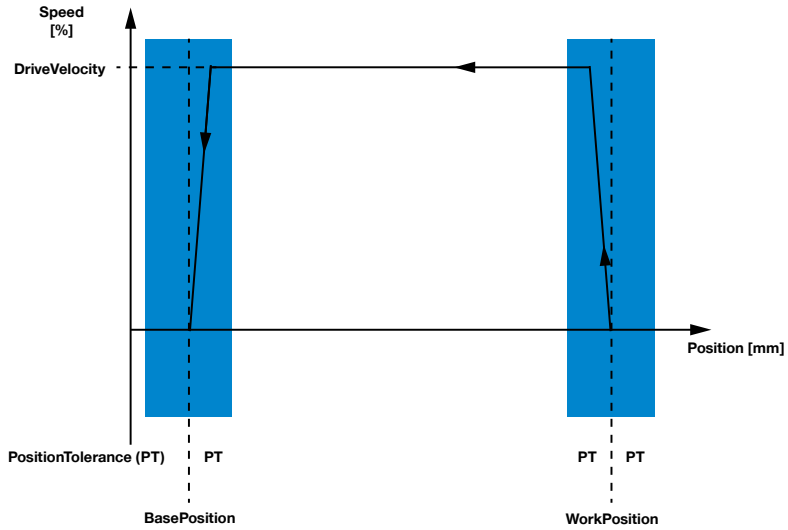

Parameter	Description
BasePosition	Position open
WorkPosition	Position closed
GripForce	Desired gripping force
TeachPosition	Expected position of the workpiece
PositionTolerance	Permitted tolerance for the workpiece

Since gripping should occur in one direction only, the positioning mode is used automatically in the opposite direction.

The movement profile determines the direction in which the workpiece is gripped:

- Outside gripping: Mode group 80
- Inside gripping: Mode group 90

11.9.3.4 Group 80: Outside gripping

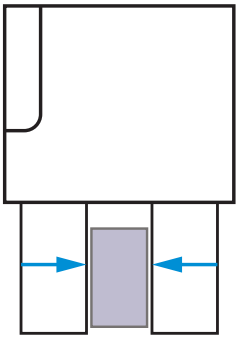

In Mode Group 80, the jaws move with ControlWord 0x0200 in the PositionProfile and to the ShiftPosition with the selected DriveVelocity. Then, they move in the ForceProfile and with the selected GripForce from the ShiftPosition to the WorkPosition onto the workpiece.

The workpiece is gripped and the set gripping force is built up. The self-locking mechanism is activated automatically. For releasing, an unlocking operation must be carried out.

If no workpiece is gripped during the gripping process, the jaws move on to the WorkPosition and are braked. The jaws move past the set position before they turn around and come to a stop at the WorkPosition. This allows workpieces to be gripped securely up to the WorkPosition.
The ControlWord 0x0100 is used to open the jaws. The jaws are moved automatically to the BasePosition in the PositionProfile.

DeviceMode	Action	ControlWord
8x	Move toward the BasePosition to open the jaws.	0x0100
80	Move in the direction of the WorkPosition at DriveVelocity until the ShiftPosition is reached. Switch to GripForce until the WorkPosition or the workpiece is reached.	0x0200
81	Move in the direction of the WorkPosition at DriveVelocity until the ShiftPosition is reached. Switch to GripForce until the WorkPosition or the workpiece is reached. Do not carry out an unlocking process.	0x0200
84	Move toward the WorkPosition until this position or the workpiece is reached. Carry out test for part loss with stronger holding pressure force.	0x0200
85	Move toward the WorkPosition until this position or the workpiece is reached. Carry out test for part loss.	0x0200

Pre-positioning force profile 80: Without holding pressure for energy-saving gripping

Before the movement starts, an unlocking operation is run for releasing. The movement begins with the positioning to the ShiftPosition. The gripper moves at the speed set in the Drive Velocity parameter. Then, the product starts moving toward the workpiece with GripForce. If the product encounters the workpiece while moving, an increase in current is detected and the gripping force is built up. The self-locking mechanism is triggered automatically and the motor is practically de-energized. This enables energy-saving gripping.

If the workpiece disengages from the gripper, the gripper jaws do not follow along and no part loss can be detected.

Pre-positioning force profile 81: High clock rate for energy-saving gripping
Behaves like mode 80, but when the gripping movement starts, the unlocking operation is omitted and the movement is started immediately. This enables a shorter response time during the drive to the WorkPosition.

► Ensure that no forces act on the gripper jaws in the BasePosition.

Pre-positioning force profile 84: With stronger holding pressure for detection of part loss
Behaves like force profile 85, but the motor is energized with more current. This increases the holding pressure force, but the heating of the gripper and the energy consumption increase.

Pre-positioning force profile 85: With holding pressure for detecting part loss
Behaves like force profile 80, but in this mode, the motor is energized continuously after gripping the workpiece. If the gripping process was successful, the bit in the TeachPosition becomes TRUE. In case a part is lost, the product keeps moving to the WorkPosition. The part loss can be detected by sensing the WorkPosition.

11.9.3.5 Group 90: Inside gripping

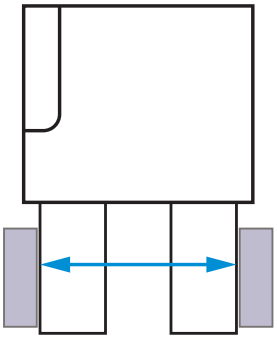

In Mode Group 90, the jaws move with ControlWord 0x0100 in the PositionProfile to the ShiftPosition with the selected DriveVelocity. Then, they move in the ForceProfile with the selected GripForce from the ShiftPosition to the WorkPosition onto the workpiece.

The workpiece is gripped and the set gripping force is built up. The self-locking mechanism is activated automatically. For releasing, an unlocking operation must be carried out.

If no workpiece is gripped during the gripping process, the jaws move on to the BasePosition and are braked. The jaws move past the set position before they turn around and come to a stop at the BasePosition. This allows workpieces to be gripped securely up to the BasePosition.
The ControlWord 0x0200 is used to open the jaws. The jaws are moved automatically to the WorkPosition in the PositionProfile.

DeviceMode	Action	ControlWord
9x	Move toward the WorkPosition to open the jaws.	0x0200
90	Move in the direction of the BasePosition at DriveVelocity until the ShiftPosition is reached. Switch to GripForce until the BasePosition or the workpiece is reached.	0x0100
91	Move in the direction of the BasePosition at DriveVelocity until the ShiftPosition is reached. Switch to GripForce until the BasePosition or the workpiece is reached. Do not carry out an unlocking process.	0x0100
94	Move toward the BasePosition until this position or the workpiece is reached. Carry out test for part loss with stronger holding pressure force.	0x0100
95	Move toward the BasePosition until this position or the workpiece is reached. Carry out test for part loss.	0x0100

Pre-positioning force profile 90: Without holding pressure for energy-saving gripping

Before the movement starts, an unlocking operation is run for releasing. The movement begins with the positioning to the ShiftPosition. The gripper moves at the speed set in the Drive Velocity parameter. Then, the product starts moving toward the workpiece with GripForce. If the product encounters the workpiece while moving, an increase in current is detected and the gripping force is built up. The self-locking mechanism is triggered automatically and the motor is practically de-energized. This enables energy-saving gripping.

If the workpiece disengages from the gripper, the gripper jaws do not follow along and no part loss can be detected.

Pre-positioning force profile 91: High clock rate for energy-saving gripping
Behaves like mode 90, but when the gripping movement starts, the unlocking operation is omitted and the movement is started immediately. This enables a shorter response time during the drive to the WorkPosition.

► Ensure that in the WorkPosition, no forces act on the gripper jaws.

Pre-positioning force profile 94: With stronger holding pressure for detection of part loss
Behaves like force profile 93, but the motor is energized with more current. This increases the holding pressure force, but the heating of the gripper and the energy consumption increase.

Pre-positioning force profile 95: With holding pressure for detecting part loss
Behaves like force profile 90, but in this mode, the motor is energized continuously after gripping the workpiece. After the gripping process, the bit in the TeachPosition is TRUE. In case a part is lost, the product moves to the BasePosition. The part loss can be detected by sensing the BasePosition.

11.10 Movement profiles GEH6xxxIL-31-B/GED6xxxIL-31-A

Various operating modes are available for products without a self-locking mechanism.

11.10.1 DeviceMode

DeviceMode	Description
5x	**Positioning profiles**
50	Standard
51	High clock rate
6x	**Force profiles – Outside gripping**
62	Standard without self-locking mechanism
7x	**Force profiles – Inside gripping**
72	Standard without self-locking mechanism
8x	**Pre-positioning – Force profiles – Outside gripping**
82	Force profile without self-locking mechanism
9x	**Pre-positioning – Force profiles – Inside gripping**
92	Force profile without self-locking mechanism

INFORMATION

Products without a self-locking mechanism exert lower gripping forces due to the increased movement speed. There is no gripping force retention from a self-locking mechanism. The motor is energized continuously during the gripping process. If the workpiece gets lost, the gripping movement is continued to the target position.

11.10.2 Positioning profiles

Modes 50 and 51 can be used for positioning the jaws or for form-fit gripping.

The movement speed is configured using the DriveVelocity parameter.

The TeachPosition does not have any significance in this mode, because the BasePosition or WorkPosition is always approached precisely.

If the jaws encounter an obstacle in this mode, they stop and the product issues an error message.

The jaws can be moved from the obstacle to the starting position again if the command is switched in the ControlWord.

No defined gripping forces can be generated in this mode. As a result, friction-locked gripping is not permitted in this mode.

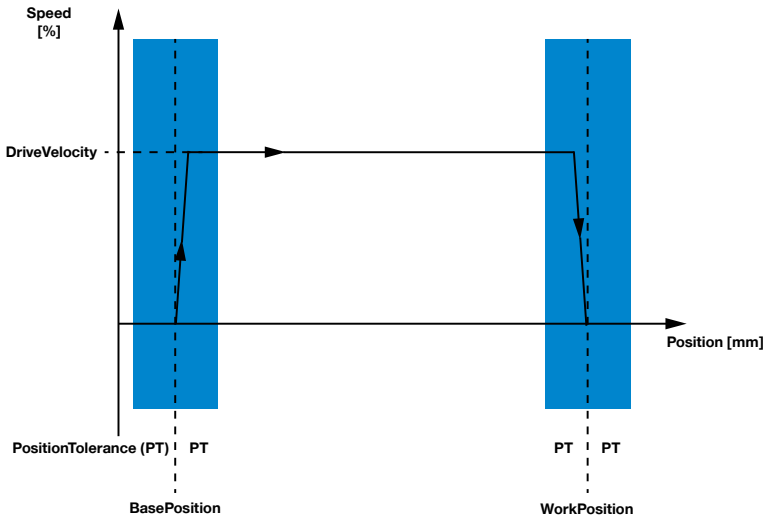

DeviceMode	Action	ControlWord
50	Positioning to BasePosition or WorkPosition	0x0100/0x0200
51	Positioning without an unlocking operation to BasePosition or WorkPosition	0x0100/0x0200

Positioning profile 50: Standard

The commands in the ControlWord trigger a movement in the corresponding direction at the selected DriveVelocity.

Positioning profile 51: High clock rate

Behaves like mode 50, but when the gripping movement starts, the unlocking operation is omitted. This enables a shorter response time.

► Ensure that no gripping force is acting on the gripper jaws.

⇨ The movement may stop as a result.

11.10.3 Force profiles

Mode Groups 60 and 70 can be used for form-fit gripping.

The gripping force is built up by the movement speed of the jaws and the motor current. The product automatically calculates the required GripVelocity from the GripForce parameter.

Gripping in the direction of WorkPosition

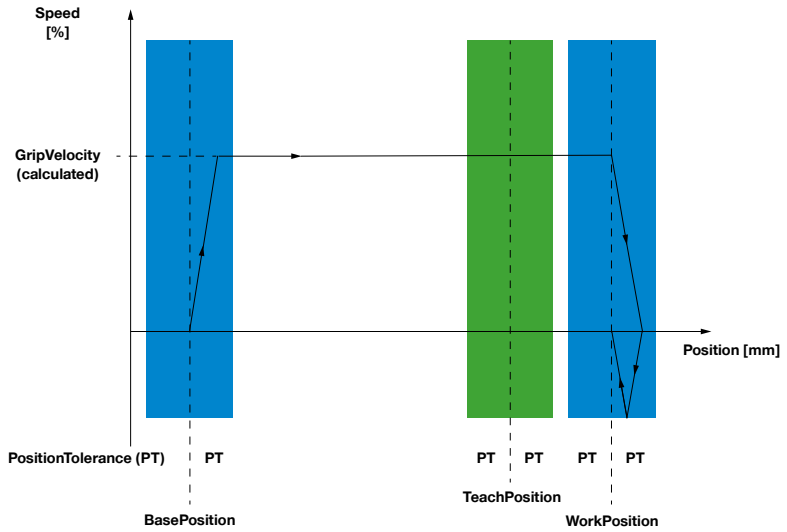

For opening, the product moves toward the standby position at DriveVelocity. The product switches into positioning mode automatically.

The figure shows outside gripping using Mode Group 60 as an example. For Mode Group 70, the BasePosition and the WorkPosition are exchanged.

Open in the direction of BasePosition

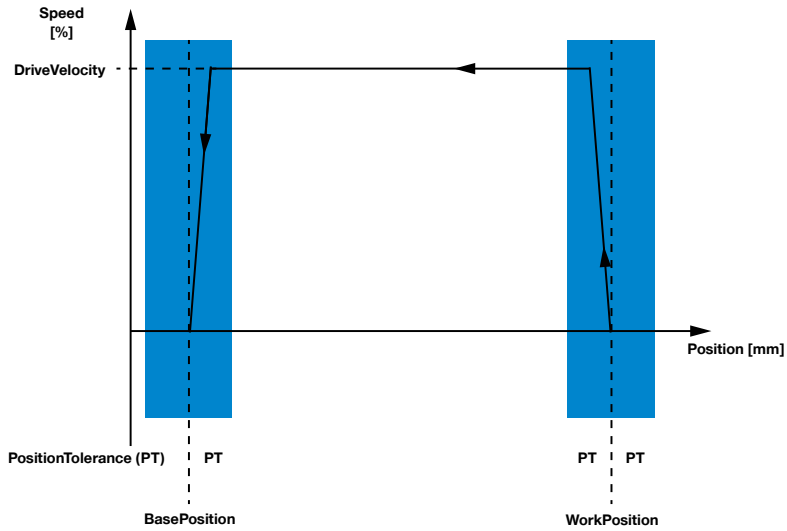

Parameter	Description
BasePosition	Position open
WorkPosition	Position closed
GripForce	Desired gripping force
TeachPosition	Expected position of the workpiece
PositionTolerance	Permitted tolerance for the workpiece
DriveVelocity	Opening speed
ShiftPosition	Not used

Since gripping should occur in one direction only, the positioning mode is used automatically in the opposite direction.

When opening, the product switches into positioning mode automatically.

The movement profile determines the direction in which the workpiece is gripped:

- Outside gripping: Mode group 60
- Inside gripping: Mode group 70

11.10.3.1 Group 60: Outside gripping

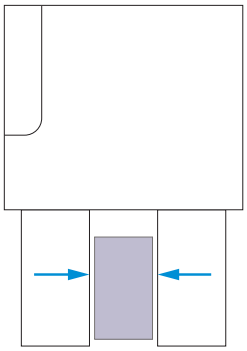

In Mode Group 60, the product moves in the ForceProfile from the BasePosition toward the WorkPosition onto the workpiece with ControlWord 0x0200.

The workpiece is gripped; the configured gripping force is built up and maintained by the motor current.

If no workpiece is gripped during the gripping process, the jaws move on to the WorkPosition and are braked. The jaws move past the set position before they turn around and come to a stop at the WorkPosition. This allows workpieces to be gripped securely up to the WorkPosition.
The ControlWord 0x0100 is used to open the jaws. The jaws are moved automatically to the BasePosition in the PositionProfile.

Mode Group 60: Typically used for outside gripping

DeviceMode	Action	ControlWord
62	Move toward the BasePosition to open the jaws.	0x0100
62	Move toward the WorkPosition until this position or the workpiece is reached. Do not carry out an unlocking process.	0x0200

Force profile 62: Standard without self-locking mechanism
The product moves onto the workpiece. When the product grips the workpiece, the configured gripping force is built up and maintained by the motor current.

11.10.3.2 Group 70: Inside gripping

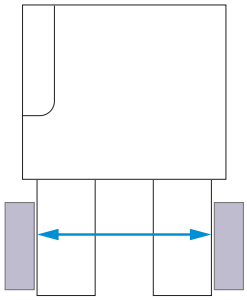

In Mode Group 70, the product in the ForceProfile moves from the BasePosition toward the WorkPosition onto the workpiece with ControlWord 0x0100.

The workpiece is gripped; the configured gripping force is built up and maintained by the motor current.

If no workpiece is gripped during the gripping process, the jaws move on to the BasePosition and are braked. The jaws move past the set position before they turn around and come to a stop at the BasePosition. This allows workpieces to be gripped securely up to the BasePosition.
The ControlWord 0x0200 is used to open the jaws. The jaws are moved automatically to the WorkPosition in the PositionProfile.

Mode Group 70: Typically used for inside gripping

DeviceMode	Action	ControlWord
72	Move toward the WorkPosition to open the jaws.	0x0200
72	Move toward the BasePosition until this position or the workpiece is reached.	0x0100

Force profile 72: Standard without self-locking mechanism
The product moves onto the workpiece. When the product grips the workpiece, the configured gripping force is built up and maintained by the motor current.

11.10.3.3 Pre-positioning force profiles

For Mode Groups 80 and 90, pre-positioning is used. Therefore, these groups are particularly suitable for time-optimized gripping with long strokes followed by force-fit gripping.

The gripping force is built up by the movement speed of the jaws and the motor current. The product automatically calculates the required GripVelocity from the GripForce parameter.

Gripping in the direction of WorkPosition

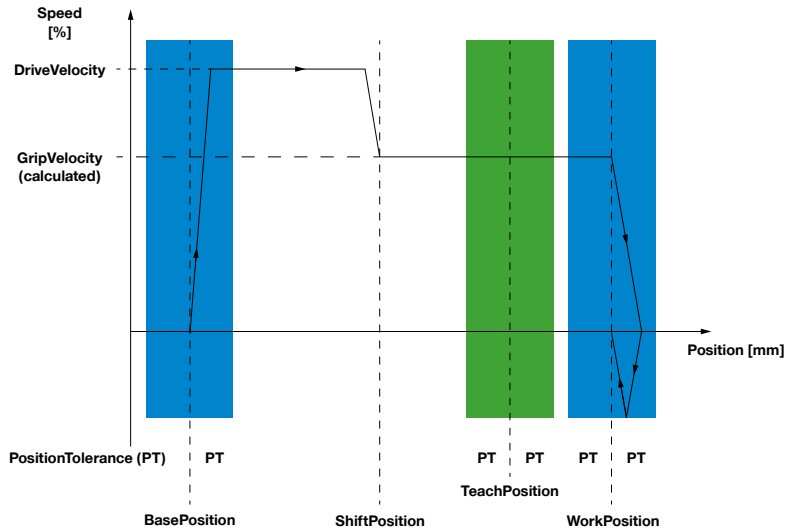

For opening, the product moves toward the standby position at DriveVelocity. The product switches into positioning mode automatically.

The figure shows outside gripping using Mode Group 80 as an example. For Mode Group 90, the BasePosition and the WorkPosition are exchanged.

Open in the direction of BasePosition

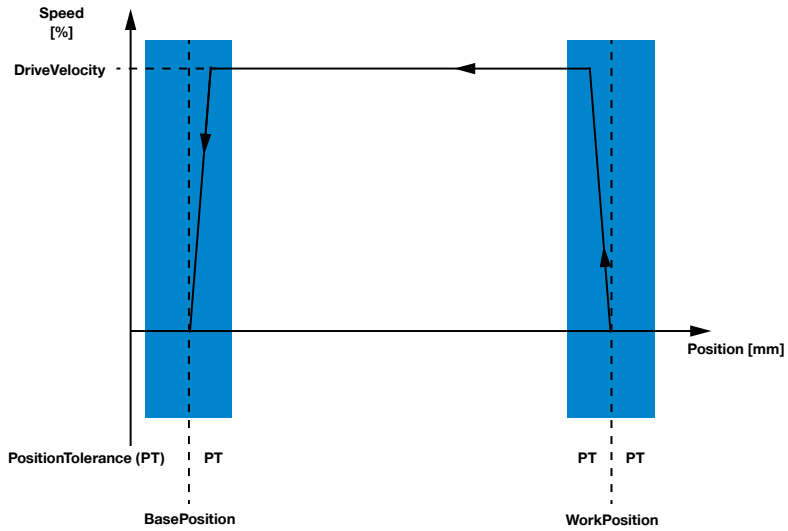

Parameter	Description
BasePosition	Position open
ShiftPosition	Switching from positioning to gripping
WorkPosition	Position closed
GripForce	Desired gripping force
TeachPosition	Expected position of the workpiece
PositionTolerance	Permitted tolerance for the workpiece
DriveVelocity	Opening speed

Since gripping should occur in one direction only, the positioning mode is used automatically in the opposite direction.

The movement profile determines the direction in which the workpiece is gripped:

- Outside gripping: Mode group 80
- Inside gripping: Mode group 90

11.10.3.4 Group 80: Outside gripping

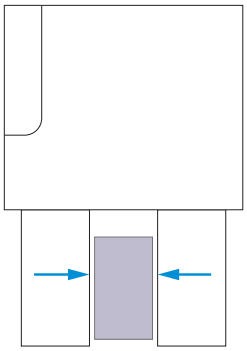

In Mode Group 80, the jaws move with ControlWord 0x0200 in the PositionProfile and to the ShiftPosition with the selected DriveVelocity. Then, they move in the ForceProfile and with the selected GripForce from the ShiftPosition to the WorkPosition onto the workpiece.

The workpiece is gripped; the configured gripping force is built up and maintained by the motor current.

If no workpiece is gripped during the gripping process, the jaws move on to the WorkPosition and are braked. The jaws move past the set position before they turn around and come to a stop at the WorkPosition. This allows workpieces to be gripped securely up to the WorkPosition.
The ControlWord 0x0100 is used to open the jaws. The jaws are moved automatically to the BasePosition in the PositionProfile.

Mode Group 82: Typically used for outside gripping

DeviceMode	Action	ControlWord
82	Move toward the BasePosition to open the jaws.	0x0100
82	Move to ShiftPosition at DriveVelocity, then switch to GripForce until the WorkPosition or the workpiece is reached.	0x0200

Pre-positioning force profile 82: Standard

The movement starts from the BasePosition and begins with the positioning to the ShiftPosition. Here, the product moves at the speed set in the DriveVelocity parameter. Then, the jaws start moving toward the workpiece with GripForce. If they encounter the workpiece, an increase in current is detected and the gripping force is built up. The gripping force is maintained by the motor current.

11.10.3.5 Group 90: Inside gripping

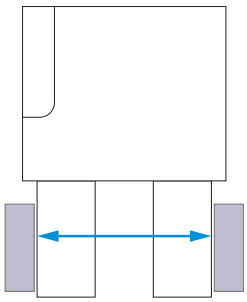

In Mode Group 90, the jaws move with ControlWord 0x0100 in the PositionProfile to the ShiftPosition with the selected DriveVelocity. Then, they move in the ForceProfile with the selected GripForce from the ShiftPosition to the WorkPosition onto the workpiece.

The workpiece is gripped; the configured gripping force is built up and maintained by the motor current.

If no workpiece is gripped during the gripping process, the jaws move on to the BasePosition and are braked. The jaws move past the set position before they turn around and come to a stop at the BasePosition. This allows workpieces to be gripped securely up to the BasePosition.
The ControlWord 0x0200 is used to open the jaws. The jaws are moved automatically to the WorkPosition in the PositionProfile.

Mode Group 92: Typically used for inside gripping

DeviceMode	Action	ControlWord
92	Move toward the WorkPosition to open the jaws.	0x0200
92	Move to ShiftPosition at DriveVelocity, then switch to GripForce until the BasePosition or the workpiece is reached.	0x0100

Pre-positioning force profile 90: Standard

The movement starts from the WorkPosition and begins with the positioning to the ShiftPosition. The gripper moves at the speed set in the Drive Velocity parameter. Then, the product starts moving toward the workpiece with GripForce. If the product encounters the workpiece while moving, an increase in current is detected and the gripping force is built up. The set gripping force is maintained by the motor current.

11.11 Interrupting the voltage supply

INFORMATION

Switching off the voltage supply can cause smaller movements of the gripper jaws.

► Please note that repeated movements can result in positioning errors.

► During an interruption of the voltage supply (e.g., when using a tool changer), make sure that the product stores the last position in the controller.

► Carry out a handshake before switching off the power supply.

⇨ This ensures that no change of position occurs during a restart.

The following example code shows the sequence in case the power supply is interrupted.

```
// Interruption of the power supply
// Switching off the motor
CASE iStep OF

0:
        DeviceMode          := 5;     // Motor off
        ControlWord         := 1;     // Start handshake (DataTransfer bit =TRUE in the ControlWord)
        iStep               := 10;    // Jump to the next step

10:
    IF StatusWord.12 AND NOT StatusWord.1   // Queries the bit DataTransferOK=TRUE from StatusWord,
    THEN                                    // Response of the product to transferred data
        ControlWord         := 0;     // Reset the ControlWord
        iStep               := 20;    // Jump to the next step
    END_IF;

20:
    IF NOT StatusWord.12 THEN
                        // Voltage supply can be interrupted
    END_IF
```

11.12 Easy Startup

Describes the process from switching on the product to the initial movement.

► Connect the product according to its assignment diagram.

⇨ The product reports the process parameters StatusWord, Diagnosis and ActualPosition immediately after the internal controller is booted up.

⇨ As soon as the PLCActive bit is registered in the StatusWord, the communication process can start.

► Transmit the process parameters to move the gripper jaws.

- DeviceMode
- WorkpieceNo
- PositionTolerance
- GripForce
- DriveVelocity
- BasePosition
- ShiftPosition
- TeachPosition
- WorkPosition

► Transmit the parameters to the product with a handshake.

INFORMATION

► For more information, refer to the section “Handshake data transfer method”.

► You can find example codes in the sections “Quickstart Basic Parameters” and “Recipe Examples”.

11.13 Quickstart Basic Parameters

INFORMATION

The following example code applies to products with a self-locking mechanism.
For products without a self-locking mechanism, Mode Group 82 must be used for operation.

In the following example, you see the first initialization of the product, the activation of the motor and the transmission of the process parameters.

```
// Initialization of the product
// Motor switch-on
// Initial move command
// = EasyStartUp Example
CASE iStep OF

0:
    IF StatusWord.6 and Diag != 0x100 THEN   // Query for PLCActive bit in the StatusWord
            ControlWord         := 1;        // Data transfer to the product
            DeviceMode          := 3;        // Command to switch on the motor
            WorkpieceNo         := 0;        // 0 = current process parameters are being used
            PositionTolerance   := 50;
            GripForce           := 50;
            DriveVelocity       := 50;
            BasePosition        := 100;
            ShiftPosition       := 2000;
            TeachPosition       := 3800;
            WorkPosition        := 4000;
            iStep               := 10;       // Jump to the next step
END_IF

10:
    IF StatusWord.12 AND StatusWord.1 THEN   // Query for DataTransferOK bit AND MotorON in the StatusWord
            ControlWord         := 0;        // Reset of the initialization
            iStep               := 20;       // Jump to the next step
    END_IF

20:
    IF NOT StatusWord.12 THEN                // Query for completion of the data transfer,
                                             // DataTransferOK = FALSE
            DeviceMode          := 85;       // Loading a DeviceMode
            ControlWord         := 1;        // Begins with the handshake
            iStep               := 30;       // Jump to the next step
END_IF

30:
    IF StatusWord.12 THEN                    // Queries the bit DataTransferOK=TRUE from StatusWord,
                                             // Response of the product to transferred data
            ControlWord         := 0;        // Reset the ControlWord
            iStep               := 40;       // Jump to the next step
    END_IF;

40:
    IF NOT StatusWord.12 THEN                // Query for completion of the data transfer,
                                             // DataTransferOK = FALSE
            ControlWord         := 512;      // Handshake is completed,
                                             // Product moves to WorkPosition (0x0200 or 512(decimal) = MoveToWork)
            iStep               := 50;       // Jump to the next step
    END_IF

50:
    IF NOT StatusWord.10 THEN                // Query for reaching the WorkPosition
            ControlWord         := 256;      // Set commands toward BasePosition
            iStep               := 60;
    END_IF;

END_CASE
```

11.14 Starting jaw movement

► Send ControlWord 0x0200 so that the jaws move toward the WorkPosition.

⇨ The jaws move toward the inside.

► Send ControlWord 0x0100 so that the jaws move toward the BasePosition.

⇨ The jaws move toward the outside.

- The motion task must be pending for as long as it takes until the desired position is reached.
- The current motion task is canceled as a result of a new handshake.

⇨ When the jaws reach the corresponding position, this is displayed in the StatusWord as follows:

- The jaws are in the BasePosition: StatusWord.8 = TRUE
- The jaws are in the TeachPosition: StatusWord.9 = TRUE
- The jaws are in the WorkPosition: StatusWord.10 = TRUE
- The jaws are not in any of the positions mentioned: StatusWord.11 = TRUE

11.15 Repeated movements in the same direction

The StatusWord includes two static flag bits, each of which is set in alternation when the product moves in one direction. This prevents uncontrolled movements of the product in case of faulty data transmission.

Depending on the location of the positions, it is possible that the product may move multiple times in the same direction. For this purpose, the direction flags must be reset.

► Send the ControlWord = 0x0004 to delete the direction flags.

⇨ The direction flags are reset when the product answers with StatusWord.13 AND 14 = FALSE.

Program example for repeated movements in the same direction:

```
// Multiple movement in one direction in Structured Text (ST)
// In this example, the motor is switched on,
// The movement profile
// Transfer gripping forces and speeds
// The product is at BasePosition = 1000.

CASE iStep OF

10:
        BasePosition        := 100;     // Assignment of a new BasePosition
        ControlWord         := 1;       // Start handshake (DataTransfer bit =TRUE in the ControlWord)
        iStep               := 20;      // Jump to the next step
END_IF;

20:
    IF StatusWord.12 THEN               // Queries the bit DataTransferOK=TRUE from StatusWord,
                                        // Response of the product to transferred data
        ControlWord         := 0;       // Reset the ControlWord
        iStep               := 30;      // Jump to the next step
    END_IF;

30:
    IF NOT StatusWord.12 THEN           // Query for completion of the data transfer,
                                        // DataTransferOK = FALSE
        ControlWord         := 4;       // Reset direction flag
                                        // (DataTransfer bit =TRUE in the ControlWord)
        iStep               := 40;
    END_IF

40:
    IF NOT StatusWord.13 AND NOT        // Query whether both direction flags
    StatusWord.14 THEN                  // (Bit ControlWord 0x0100 AND
                                        // ControlWord 0x0200 = FALSE in ControlWord)
        ControlWord         := 256;     // Moves back toward BasePosition
        iStep               := 50;
    END_IF;

END_CASE
```

11.16 Recipe examples

11.16.1 Save recipe

INFORMATION

The following example code applies to products with a self-locking mechanism.
For products without a self-locking mechanism, Mode Group 82 must be used for operation.

The following example code shows how process parameters can be stored in the internal workpiece recipe.

```
// Store tool workpiece recipes in Structured Text (ST)

CASE iStep OF

10:
    IF StatusWord.6 and Diag != 0x100 THEN
            DeviceMode          := 85;      // Assignment of desired process parameters
            WorkpieceNo         := 3;       // Recipe is to be stored as the third workpiece recipe
            PositionTolerance   := 50;
            GripForce           := 50;
            DriveVelocity       := 50;
            BasePosition        := 100;
            ShiftPosition       := 2000;
            TeachPosition       := 3800;
            WorkPosition        := 4000;
            iStep               := 20;      // Jump to the next step
    END_IF;

20:
            ControlWord         := 1;       // Begins with the handshake
            iStep               := 30;      // Jump to the next step

30:
    IF StatusWord.12 THEN                   // Queries the bit DataTransferOK=TRUE from StatusWord,
                                            // Response of the product to transferred data
            ControlWord         := 0;       // Reset the ControlWord
            iStep               := 40;      // Jump to the next step
    END_IF;

40:
    IF NOT StatusWord.12 THEN               // Query for completion of the data transfer,
                                            // DataTransferOK = FALSE
            ControlWord         := 2;       // Handshake is completed,
                                            // storage starts here via the WritePDU bit in the ControlWord
            iStep               := 50;      // Jump to the next step
    END_IF;

50:
    IF StatusWord.12 THEN                   // Queries the DataTransferOK = TRUE bit from StatusWord
            ControlWord         := 0;       // Reset the ControlWord
            iStep               := 60;      // Jump to the next step
    END_IF;

60:
    IF NOT StatusWord.12 THEN               // Query for completion of the data transfer,
                                            // DataTransferOK = FALSE
            // Do other things...           // Storage is completed
    END_IF;

END_CASE
```

11.16.2 Loading a recipe

The following example code shows how process parameters can be loaded to the internal workpiece recipe.

```
CASE iStep OF

10:
        WorkpieceNo     := 3;     // Load third workpiece recipe
        ControlWord     := 1;     // Begins with the handshake
        iStep           := 20;    // Jump to the next step

20:
    IF StatusWord.12 THEN         // Queries the bit DataTransferOK=TRUE from StatusWord,
                                  // Response of the product to transferred data
        ControlWord     := 0;     // Reset the ControlWord
        iStep           := 30;    // Jump to the next step
    END_IF;

30:
    IF NOT StatusWord.12 THEN     // Query for completion of the data transfer,
                                  // DataTransferOK = FALSE
        // Do other things...     //Handshake is completed,
                                  // Parameters from the third recipe have been taken over into the current process parameters.
    END_IF;

END_CASE
```

12 Operation

WARNING

Risk of injury caused by falling parts

Using an incorrect gripping force or gripper fingers or a power failure can cause a loss of the gripping force in products without a self-locking mechanism.

- ► If possible, use form-fit gripper fingers.
- ► When using frictional fit gripper fingers, install a suitable gripping force retention.
- ► Make sure that no personnel are present underneath the product.

INFORMATION

For products with a self-locking mechanism, the jaws remain in their positions and the gripping force of the product stays constant in the event of a power failure.

The gripper jaws can be opened via an emergency release that can be unlocked mechanically.

- ► Please contact Customer Service if you have any questions.

12.1 Emergency release for GEH6000IL

CAUTION

Risk of injury due to uncontrolled movements

Risk of injury in the event of uncontrolled movement of the product when the power supply is connected.

- ► Switch off the power supply to the machine before carrying out any work.
- ► Secure the power supply against being switched on unintentionally.
- ► Check the machine for any residual energy that may be present.

CAUTION

Risk of injury in case of non-compliance

- ► Disconnect the actuator voltage before pressing the emergency release.

Design size	Wrench size [mm]
GEH6040IL-03-B	2.5
GEH6040IL-31-B	3
GEH6060IL-03-B	2.5
GEH6060IL-31-B	2
GEH6140IL-03-B	3
GEH6180IL-03-B	3

- ► Secure the workpieces to prevent them from falling.
- ► Remove the protective cap.
- ► Actuate the emergency release with a corresponding Allen key.
- ► Carry out another reference run after any emergency release.

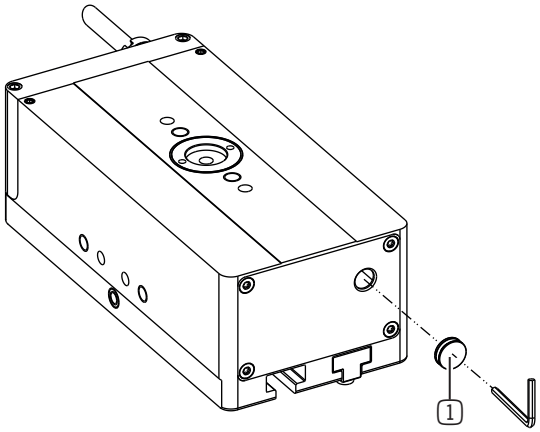

1 Protective cap

12.2 Emergency release for GED6000IL

CAUTION

Risk of injury due to uncontrolled movements

Risk of injury in the event of uncontrolled movement of the product when the power supply is connected.

- ▶ Switch off the power supply to the machine before carrying out any work.
- ▶ Secure the power supply against being switched on unintentionally.
- ▶ Check the machine for any residual energy that may be present.

CAUTION

Risk of injury in case of non-compliance

- ▶ Disconnect the actuator voltage before pressing the emergency release.

Design size	Wrench size [mm]
GED6040IL-03-A	2.5
GED6040IL-31-A	2
GED6140IL-03-A	3

- ▶ Secure the workpieces to prevent them from falling.
- ▶ Remove the protective cap.
- ▶ Actuate the emergency release with a corresponding Allen key.
- ▶ Carry out another reference run after any emergency release.

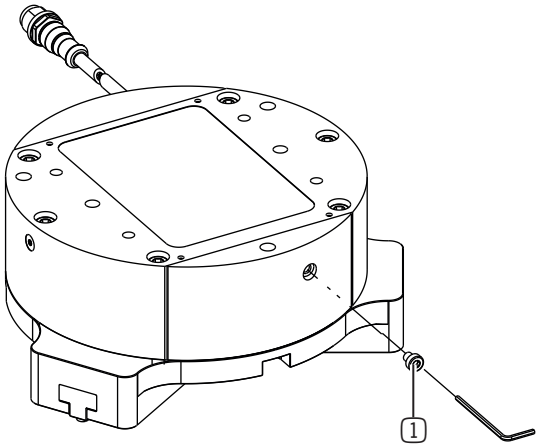

1 Protective cap

13 Gripping force charts

INFORMATION

- ▶ You can find the information in the technical data sheet on our website.
- ▶ Please contact Customer Service if you have any questions.

14 Error diagnosis

Error code	Error	Possible cause	Measure
0x0000	Device is ready for operation.	-	-
0x0001	Motor controller is switched off.	• Motor controller has not yet been activated. • Motor controller has been switched off. • Motor controller was switched off for device protection.	▶ Switch on the motor controller.
0x0100	Actuator voltage is not present or is too low.	• Actuator voltage not connected • Actuator voltage insufficient • Cable break • STO input circuit is interrupted.	▶ Check the actuator voltage. ▶ Switch on the STO input circuit.
0x0101	Temperature above maximum permitted temperature.	• Ambient temperature is too high • Overload of the product	▶ Ensure improved cooling of the product. ▶ Make sure that the product moves freely.
0x0102	Temperature is below minimum permitted temperature.	• Ambient temperature is too low	▶ Provide an adequate operating temperature.
0x0206	Motion task cannot be executed (CRC error).	• Error	▶ Apply the process data via a handshake. ▶ Please contact Customer Service.
0x0300	ControlWord is not plausible.	• Multiple bits were set in the ControlWord.	▶ In the ControlWord, check that only one bit is set.
	Initial state after gripper restart	• Modified process data were not taken over.	▶ Apply the process data via a handshake.
0x0301	Positions implausible	• Transmitted positions are not plausible. • Modified process data were not taken over.	▶ Check the transmitted process data. ▶ Apply the process data via a handshake.
0x0302	GripForce is not plausible.	• Transmitted GripForce is not plausible. • Modified process data were not taken over.	▶ Check the transmitted process data. ▶ Apply the process data via a handshake.
0x0303	DriveVelocity not plausible	• Transmitted DriveVelocity is not plausible. • Modified process data were not taken over.	▶ Check the transmitted process data. ▶ Apply the process data via a handshake.
0x0304	PositionTolerance is not plausible.	• Transmitted PositionTolerance is not plausible. • Modified process data were not taken over.	▶ Check the transmitted process data. ▶ Apply the process data via a handshake.
0x0305	Position measuring system not referenced.	• Position measuring system is not referenced. • A reference run is being performed.	▶ Reference the product. ▶ Wait until the reference run is complete.

Error code	Error	Possible cause	Measure
0x0306	DeviceMode is not plausible.	• Transmitted DeviceMode is not plausible. • Modified process data were not taken over.	▶ Check the transmitted process data. ▶ Apply the process data via a handshake.

0x0307	Motion task cannot be executed.	• Multiple motion tasks in the same direction.
		  • In DM6x, MoveToWork if ActualPosition > WorkPosition
		  • In DM7x, MoveToBase if ActualPosition < BasePosition
		  • In DM8x, MoveToWork if ActualPosition > ShiftPosition
		  • In DM9x, MoveToBase if ActualPosition < ShiftPosition
			▶ Reset the direction flag.
			  ▶ Send the move command again.
			▶ Position the product correctly before gripping.

0x0308	WorkpieceNo cannot be selected.	• Transmitted workpiece number is outside the permitted range. • Modified process data were not taken over.	▶ Check the transmitted process data. ▶ Apply the process data via a handshake.
0x0313	Calculated ShiftPosition exceeded	• Start position is not permitted for the selected motion task.	▶ Move to the BasePosition with DeviceMode 60. ▶ Move to the WorkPosition with DeviceMode 70.
0x0402	Jam	• Gripper jaws are blocked. • Gripper jaws are tensioned incorrectly.	▶ Make sure that the product moves freely. ▶ Send a motion task in the opposite direction.
0x0404	Position sensor error	• Fault of the integrated position sensor	▶ Reference the product with a homing command. ▶ Please contact Customer Service.
0x0406	Error	• Error	▶ Please contact Customer Service.
0x040B	Error	• Error	▶ Please contact Customer Service.
0x040C	Error	• Error	▶ Please contact Customer Service.
0x040D	Error	• Error	▶ Please contact Customer Service.
0x040E	Error	• Error	▶ Please contact Customer Service.
0x040F	Error	• Error	▶ Please contact Customer Service.

15 Table with acyclic data (ISDU)

INFORMATION

IO-Link distinguishes between cyclical process data (PDU) and acyclic data (ISDU).

Access to acyclic data is not arranged very conveniently for all control system and IO-Link master combinations. For this reason, the product can be used without acyclic data. This makes it as easy as possible to control the product.

▶ Please contact Customer Service if you have any questions.

INFORMATION

▶ Note that the acyclic data with the following parameters correspond to the reflection of the process data:

- StatusWord, Diagnosis, ControlWord, ActualPosition, TeachPosition, WorkpieceNo, DeviceMode, PositionTolerance, GripForce, DriveVelocity, BasePosition, ShiftPosition, WorkPosition

Index	Name	Data type	Access rights	Values
0x0017 (23)	Firmware version	STRING	Read	-
	Description			
	Firmware version consists of four parts in the following sequence:			
	Communication Firmware Example: • Type: SWA000058 • Version: R00			
	Application Firmware Example: • Type: SWA000059 • Version: P00			
	Motor Control Firmware Example: • Type: SWA000060 • Version: D00			
	Parameters Example: • Type: PAR000059_04 • Version: 10030			
0x0040 (64)	StatusWord	UINT16	Read	0 - 65535
	Description			
	Read out the StatusWord			
0x0041 (65)	Diagnosis	UINT16	Read	0 - 65535
	Description			
	Read out of the diagnostic code			
0x0042 (66)	Cycle counter	UINT32	Read	0 to 4294967295
	Description			
	Read out of the total number of cycles			
0x0043 (67)	Temperature	UINT16	Read	0 to 100 °C
	Description			
	Read out the current temperature			
0x0044 (68)	ControlWord	UINT16	Read	0 - 65535
	Description			
	Read out of the ControlWord			

Index	Name	Data type	Access rights	Values
0x0045 (69)	Error code	STRING	Read	-
	Description			
	Read out of the current error state			
0x0046 (70)	Error counter	UINT32	Read	0 to 4294967295
	Description			
	Read out of the number of errors since the restart			
0x0100 (256)	ActualPosition	UINT16	Read	0 to max. jaw stroke of the product [0,01 mm]
	Description			
	Read out the current position of the gripper jaws			
0x0101 (257)	TeachPosition	UINT16	Read	0 to max. jaw stroke of the product [0,01 mm]
	Description			
	Read out of the current transmitted TeachPosition			
0x0102 (258)	WorkpieceNo	UINT8	Read	0 - 32
	Description			
	Read out of the transmitted workpiece number			
0x0103 (259)	DeviceMode	UINT8	Read	1-255
	Description			
	Read out of the transmitted travel mode			
0x0104 (260)	PositionTolerance	UINT8	Read	0 to 255
	Description			
	Read out of the transmitted tolerance of the TeachPosition			
0x0107 (263)	DriveVelocity	UINT8	Read	1 to 100 %
	Description			
	Read out of the transmitted movement speed			
0x0108 (264)	BasePosition	UINT16	Read	0 to max. jaw stroke of the product [0,01 mm]
	Description			
	Read out of the transmitted outer jaw position			
0x0109 (265)	ShiftPosition	UINT16	Read	0 to max. jaw stroke of the product [0,01 mm]
	Description			
	Read out of the transmitted toggle position			
0x010A (266)	WorkPosition	UINT16	Read	0 to max. jaw stroke of the product [0,01 mm]
	Description			
	Read out of the transmitted inner jaw position			
0x0120 (288)	NoHomingAtStartup	UINT8	Read/write	0 to 1
	Description			
	For ISDU 288 = 1, the homing bit = 0 after the cold boot. ► Perform a homing after a cold start. The product is delivered with ISDU 288 = 0. This setting is stored in the product. ► Rewrite the values when replacing the product. The function is available starting from Application Firmware Version *SWA000059_P00* (see Index 0x0017).			

Index	Name	Data type	Access rights	Values
0x0121 (289)	RegripForce	UINT8	Read/write	1 to 100 %
	Description			
	The holding pressure current can be adapted for DeviceModes 64, 74, 84 and 94. The function is available starting from Application Firmware Version *SWA000059_P00* (see Index 0x0017). The holding pressure current is not preset to the maximum possible value when delivered. The maximum value can be changed via ISDU. ► Read the current settings in ISDU 289. • The factory setting is 90. Example: 90% for GEH61xxIL-03-B. ► Write the new values to ISDU 289. • The values can vary between 1% and 100%. ► Do not use any amperages that are below the preset value. ⇨ This setting is stored in the product. ► Rewrite the values when replacing the product.			
0x0122 (290)	ForceReset	UINT8	Read/write	0 to 1
	Description			
	In DeviceModes 63, 64, 73, 74, 84, 85 and 95, no unlocking operation is normally carried out. The *ForceReset* function makes it possible to carry out the unlocking operation. The product is delivered with ForceReset = 0. ► Set ForceReset = 1 to request the unlocking operation. ⇨ This setting is stored in the product. ► Rewrite the values when replacing the product. The function is available starting from Application Firmware Version *SWA000059_P00* (see Index 0x0017).			
0x0123 (291)	ForceMove	UINT8	Read/write	0 to 1
	Description			
	If in DeviceModes 6x the ActualPosition is greater than the WorkPosition, MovetoWork is not executed and an error is generated (diagnostics 0x307). If in DeviceModes 6x the ActualPosition is less than the BasePosition, MovetoWork is not executed and an error is generated (diagnostics 0x307). The move command can be executed using the *ForceMove* function. The product is delivered with ForceMove = 0. ► Set ISDU 291 = 1 to enable the move command. ⇨ This setting is stored in the product. • DeviceMode 6x – ActualPosition > WorkPosition – MovetoWork ForceMove = 0: Move command is not executed (diagnostics 0x307). ForceMove = 1: Move command is executed. • DeviceMode 7x – ActualPosition < BasePosition – MovetoBase ForceMove = 0: Move command is not executed (diagnostics 0x307). ForceMove = 1: Move command is executed. ► Rewrite the values when replacing the product. The function is available starting from Application Firmware Version *SWA000059_P00* (see Index 0x0017).			

16 Maintenance

NOTICE

Material damage resulting from blowing out with compressed air

Blowing out the product with compressed air can cause malfunctions.

► Never purge the product with compressed air.

NOTICE

Material damage caused by unsuitable cleaning materials

Seals, insulation, coatings and other surfaces may be damaged by solvent-based cleaning agents.

► Make sure that no liquids penetrate the product.

► Use chemically and biologically neutral cleaning agents.

► Use cleaning agents that are categorized as being nonhazardous to health.

► Use soft, lint-free cloths for cleaning the surface.

The use of the following cleaning agents is strictly prohibited:

- Acetone
- Cleaning solvent
- Nitrocellulose thinner/turpentine oil (solvents)

NOTICE

Contamination of the environment due to escaping lubricants

Lubricants can escape through moving machine parts. This can lead to contamination of the machine, the workpiece and the environment.

► Remove leaking lubricant immediately and thoroughly.

Maintenance-free operation of the product is guaranteed for up to **5 million cycles**.

► Note that the product could become damaged under the following circumstances:

- Dirty environment
- Improper use and use that does not comply with the performance data
- Permissible temperature range not observed

► Even though the product is maintenance-free as mentioned above, perform a regular visual inspection to check for any damage or contamination.

► Have maintenance work that requires disassembly of the product performed by customer service only.

⇨ Dismantling and reassembling the product without authorization may result in complications, as special installation equipment is required in some cases. Zimmer Group GmbH accepts no liability for any resulting malfunctions or damage.

16.1 Testing the STO safety function

In accordance with DIN EN ISO 13849-1, a test of the safety function must be carried out for an application using a control architecture of control category 2.

This test is carried out once a year for SIL 2 and once every 24 hours for SIL 3.

► Test the STO safety function for SIL 3 as part of daily maintenance work.

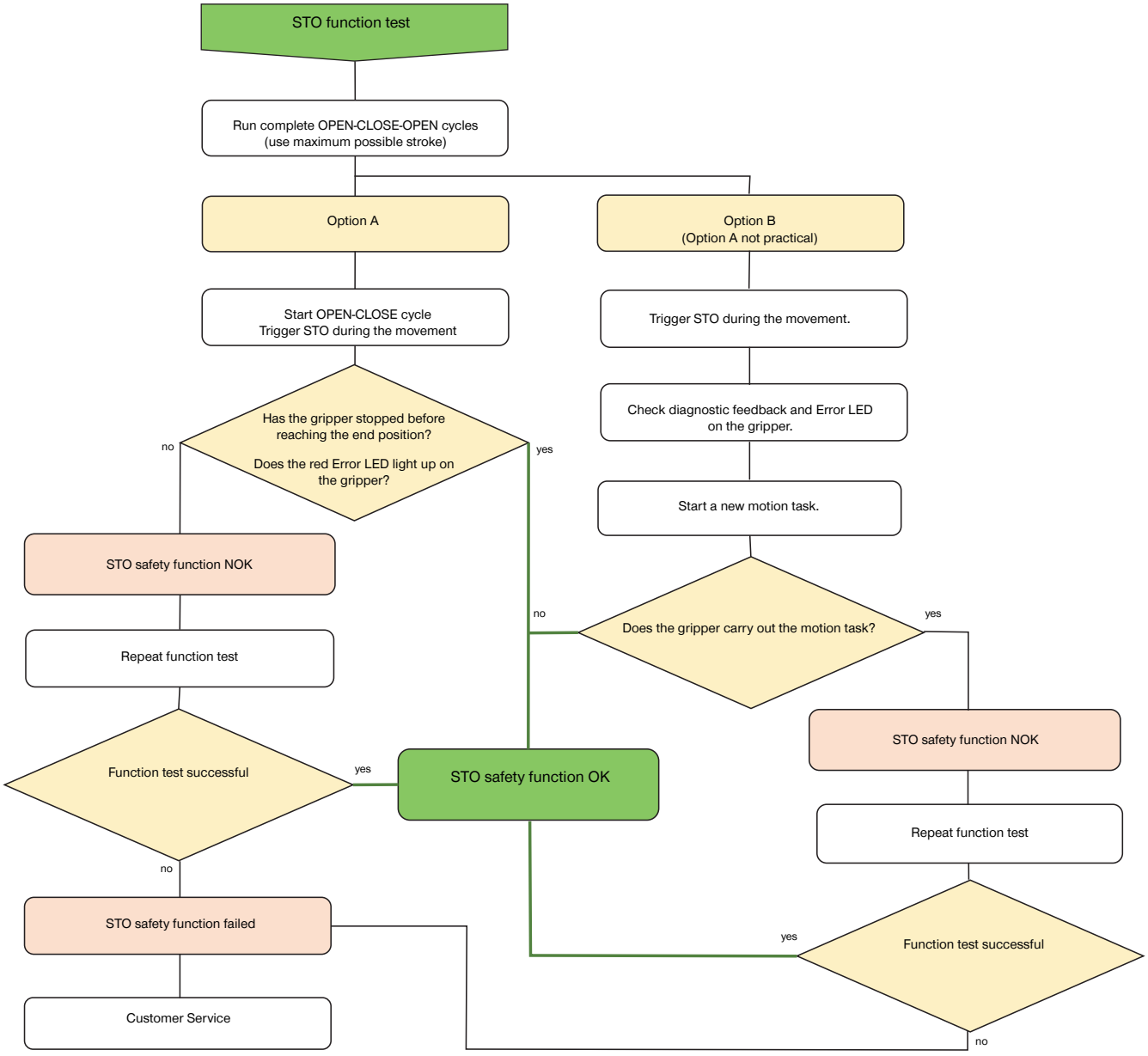

INFORMATION

► Document the result of the test in accordance with DIN EN ISO 13849-1, Section 10.

► Store this documentation in the general maintenance documents.

17 Decommissioning/disposal

INFORMATION

When the product reaches the end of its operational phase, it can be completely disassembled and disposed of.

- ► Disconnect the product completely from the power supply.
- ► Dispose of the components properly according to the material groups.
- ► Comply with the locally applicable environmental and disposal regulations.

18 RoHS declaration

in terms of the EU Regulation 2011/65/EU

Name and address of the manufacturer:

Zimmer Group GmbH

Am Glockenloch 2
77866 Rheinau, Germany
+49 7844 9138 0
info@zimmer-group.com
www.zimmer-group.com

We hereby declare that the incomplete machine described below

Product designation:	2-jaw parallel gripper, 3-jaw concentric gripper
Type designation:	GEH6000, GED6000

conforms to the requirements of the directive in its design and the version we put on the market.

Michael Hoch	Rheinau, Germany, 2020-09-20	
Authorized representative for the compilation of relevant technical documents	(Place and date of issuance)	Martin Zimmer (Legally binding signature) Managing Partner

19 Declaration of Incorporation

In terms of the EU Machinery Directive 2006/42/EC (Annex II 1 B)

Name and address of the manufacturer:

Zimmer Group GmbH

Am Glockenloch 2
77866 Rheinau, Germany
+49 7844 9138 0
info@zimmer-group.com
www.zimmer-group.com

We hereby declare that the incomplete machine described below

Product designation:	2-jaw parallel gripper, 3-jaw concentric gripper
Type designation:	GEH6000, GED6000

conforms to the requirements of the Machinery Directive, 2006/42/EC, Article 2g, Annex VII, b – Annex II, b, in its design and the version we put on the market.

We hereby confirm that all the relevant basic health and safety requirements for the product have been observed and implemented.

A full list of applied standards can be obtained from the manufacturer.

We also declare that the specific technical documents were produced in accordance with Annex VII Part B of this Directive. We undertake to provide the market supervisory bodies with electronic versions of special documents for the incomplete machine through our documentation department, should they have reason to request them.

The incomplete machine may only be commissioned if it has been ascertained, if applicable, that the machine or system in which the incomplete machine is to be installed satisfies the requirements of Directive 2006/42/EC on Machinery and an EC Declaration of Conformity has been drawn up in accordance with Annex II 1 A.

Kurt Ross	Rheinau, Germany, 2021-06-04	
Authorized representative for the compilation of relevant technical documents	(Place and date of issuance)	Martin Zimmer (Legally binding signature) Managing Partner

20 Declaration of Conformity

As defined by the EC Directive 2014/30/EU on electromagnetic compatibility

Name and address of the manufacturer:

Zimmer Group GmbH

Am Glockenloch 2
77866 Rheinau, Germany
+49 7844 9138 0
info@zimmer-group.com
www.zimmer-group.com

We hereby declare that the product described below

Product designation:	2-jaw parallel gripper, 3-jaw concentric gripper
Type designation:	GEH6000, GED6000

conforms to the requirements of the Electromagnetic Compatibility Directive 2014/30/EU in its design and the version we put on the market.

The following harmonized standards have been used:

DIN EN ISO 12100	Safety of machinery - General principles for design - Risk assessment and risk reduction
DIN EN 61000-6-3	EMC Generic standard, Emission standard for residential, commercial and light-industrial
DIN EN 61000-6-2	EMC Generic standard, Emission standard for industrial environments
DIN EN 61000-6-4	EMC Generic standard, Immunity for industrial environments

A full list of applied standards can be obtained from the manufacturer.

Kurt Ross	Rheinau, Germany, 2021-06-04	
Authorized representative for the compilation of relevant technical documents	(Place and date of issuance)	Martin Zimmer (Legally binding signature) Managing Partner