MATCH

INSTALLATION AND OPERATING INSTRUCTIONS

MATCH robot module

LWR50F-01-03-A

LWR50F-09-03-A

LWR50F-31-03-A

DDOC01360

THE KNOW-HOW FACTORY

ZIMMER group

Content

1 Introduction 4
1.1 Supporting documents 4
1.2 Notices and graphics in the instructions 4

2 Safety notices 5

3 Proper use 6

4 Personnel qualification 7
4.1 Electricians 7
4.2 Specialists 7
4.3 Instructed personnel 7
4.4 Service personnel 7
4.5 Additional qualifications 7

5 Product description 8
5.1 Type plate 9
5.2 Product variants and compatibility 9

6 Functional description 9
6.1 LED status display 10
6.1.1 Connect LED 10
6.1.2 Status display 11
6.1.3 Basic module 12
6.2 Functional safety 14

7 Technical data 14

8 Accessories/scope of delivery 14

9 Transportation/storage/preservation 14

10 Installation 15
10.1 Installing the product 15
10.2 Installing the entire system 16
10.3 Installing the energy supply 16
10.3.1 Installing the pneumatic system 16
10.3.2 Installing the electrical system 17
10.3.2.1 LWR50F-01-03-A, LWR50F-09-03-A 17
10.3.2.2 LWR50F-31-03-A 17
10.4 Static charge 18
10.5 Heat dissipation 18
10.6 Installing accessories 18

11 Installation 19

12 Commissioning 19

13 Operation 19
13.1 Operating Freedrive 19

14 Error diagnosis 20

15 Maintenance 20

16 Resetting to factory settings 20

17 Decommissioning/disposal 20

18 RoHS declaration 21

EN / 2026-09-15
DDOC01360 / f

19 Declaration of Incorporation (Machinery Directive) 22

20 Declaration of Incorporation 23

21 Declaration of Conformity 24

1 Introduction

1.1 Supporting documents

NOTICE

Read through the instructions before installing or working with the product.

The instructions contain important notes for your personal safety. They must be read and understood by all persons who work with or handle the product during any phase of the product lifetime.

The documents listed below are available for download on our website www.zimmer-group.com.

- Instructions
- Catalogs, drawings, CAD data, performance data
- Information on accessories
- Technical data sheets
- General Terms and Conditions, including warranty information.

⇨ Only those documents currently available on the website are valid.

In these instructions, "product" refers to the product designation on the title page!

1.2 Notices and graphics in the instructions

DANGER

This notice warns of an imminent danger to the life and health of people. Ignoring these notices can lead to serious injury or even death.

► You absolutely must comply with the described measures for avoiding these dangers!

⇨ The warning symbols are assigned according to the type of danger.

WARNING

This notice warns of a situation that is potentially hazardous to personal health. Ignoring these notices can cause serious injury or damage to health.

► You absolutely must comply with the described measures for avoiding these dangers!

⇨ The warning symbols are assigned according to the type of danger.

CAUTION

This notice warns of a situation that is potentially hazardous to persons. Ignoring these notices can cause minor, reversible injuries.

► You absolutely must comply with the described measures for avoiding these dangers!

⇨ The warning symbols are assigned according to the type of danger.

NOTICE

This notice warns of possible material and environmental damage. Ignoring these notices can result in damage to the product or the environment.

► You absolutely must comply with the described measures for avoiding these dangers!

⇨ The warning symbols are assigned according to the type of danger.

INFORMATION

This category contains useful tips for handling the product efficiently. Failure to observe these tips will not result in damage to the product. This information does not include any information relevant to health or workplace safety.

2 Safety notices

CAUTION

Risk of injury and material damage in case of non-compliance

The product is state-of-the-art.

The following are examples of situations in which the product may cause a hazard:

- The product is not properly installed, used or maintained.
- The product is not used for its designated purpose.
- The locally applicable regulations, laws, directives or guidelines are not observed.

▶ The product may only be used in accordance with these instructions and the product's technical data. Any changes or additions to the intended use of the product, as well as modifications to the product, such as those in the following examples, require the written permission of the manufacturer:

- Use of the product under extreme conditions, such as aggressive fluids or abrasive dusts
- Additional drilled holes or threads

⇨ Zimmer Group GmbH shall accept no liability for any damage caused by improper use. The operator bears sole responsibility.

▶ Make sure that the power supply is disconnected before you mount, adjust, modify, maintain or repair the product.

▶ Whenever work is carried out on the product, make sure that the product cannot be actuated by mistake.

▶ Perform maintenance tasks, renovation work or attachment work outside of the machine's danger zone when possible.

▶ Always adhere to the required maintenance intervals.

▶ When using the product under extreme conditions, adjust the maintenance interval according to the degree of contamination.

▶ Check the completeness and tightening torques of all mounting screws.

NOTICE

Cybersecurity

▶ The operator is responsible for ensuring that unauthorized persons do not have access to the product, either physically or remotely.

CAUTION

Notes and handling regulations for electrostatically sensitive components

Electrostatically sensitive components are individual components, integrated circuits or assemblies that can be damaged by electrostatic fields or electrostatic discharge.

- ▶ When handling electrostatic components, make sure that persons, the work area and packaging are all fully grounded.
- ▶ Touch electronic components only in appropriately identified areas with conductive flooring and only if:
  - You are grounded by means of special bracelets.
  - You wear shoes that are suitable and approved for the discharge of electrostatic charges.
- ▶ Do not bring electronic assemblies into contact with plastics and parts of clothing that have plastic content.
- ▶ Store electronic assemblies on conductive underlays only.
- ▶ Do not install electronic assemblies in the vicinity of data back-up devices or monitors (monitor distance > 100 mm).
- ▶ Perform measurements on electronic assemblies only if:
  - The measuring instrument is grounded (e.g. via a ground conductor).
  - The measuring head is momentarily discharged before measuring with a floating measuring instrument.

3 Proper use

NOTICE

Material damage and malfunction in case of non-compliance

The product is only to be used in its original state with its original accessories, with no unauthorized changes and within the stipulated parameter limits and operating conditions.

Any other or secondary use is deemed improper.

- ▶ Operate the product only in compliance with the associated instructions.
- ▶ Operate the product only when it is in a technical condition that corresponds to the guaranteed parameters and operating conditions.
- ⇨ Zimmer Group GmbH shall accept no liability for any damage caused by improper use. The operator bears sole responsibility.

- The product is designated for use in closed facilities.
- The product is intended for industrial use.
- The product is not suited for use in a potentially explosive atmosphere.
- Direct contact with perishable goods/food is not permitted.
- The product must always be mounted on materials that dissipate heat.
- The product is designed exclusively for electric operation using a 24 V DC power supply.
- The product is designed specifically for use on robot systems in combination with other products from the MATCH tool-changing system.

4 Personnel qualification

WARNING

Inadequate qualification can cause injury and material damage

If inadequately qualified personnel perform work on the product, this can cause serious injuries and significant material damage.

- ▶ All work on the product must be performed by qualified personnel.
- ▶ Before working with the product, read the document in its entirety and make sure that you have understood everything.
- ▶ Observe country-specific accident prevention regulations and the general safety notices.

The following qualifications are a prerequisite for performing various work on the product.

4.1 Electricians

Electricians are able to perform work on electrical systems, can recognize and avoid possible dangers and know the relevant standards and provisions due to their technical training, knowledge and experience.

4.2 Specialists

Specialists are able to perform the assigned work, can recognize and avoid possible dangers and know the relevant standards and provisions due to their technical training, knowledge and experience.

4.3 Instructed personnel

Instructed personnel have been trained by the operating company on the tasks and possible dangers of improper behavior.

4.4 Service personnel

Service personnel are able to perform the assigned work and can recognize and avoid possible dangers due to their technical training, knowledge and experience.

4.5 Additional qualifications

Persons who work with the product must be familiar with the valid safety regulations and laws as well as the standards, guidelines and laws listed in this document.

Personnel who work with the product must have facility-issued authorization to commission, program, configure, operate, maintain and also decommission this product.

5 Product description

The MATCH End-of-Arm Ecosystem is equipped with an extensive range of functions and universal communication interfaces. MATCH is compatible with all common lightweight robots. The system can be mounted on the robot flange and set up with a few manual adjustments.

This product a robot control module with an integrated Smart Communication Module (SCM).

The Smart Communication Module (SCM) is a gateway between the grippers and the robot control system. The SCM can be configured via the Human Machine Interface (HMI) software. The grippers can be controlled using the Comfort app on the robot control panel.

The original parts from Zimmer Group GmbH required for the safety principles are:

1. MATCH robot module (LWR50F-xx)
2. MATCH gripper (LWR50L-xx)
3. MATCH storage station (ALWR1-50-A)

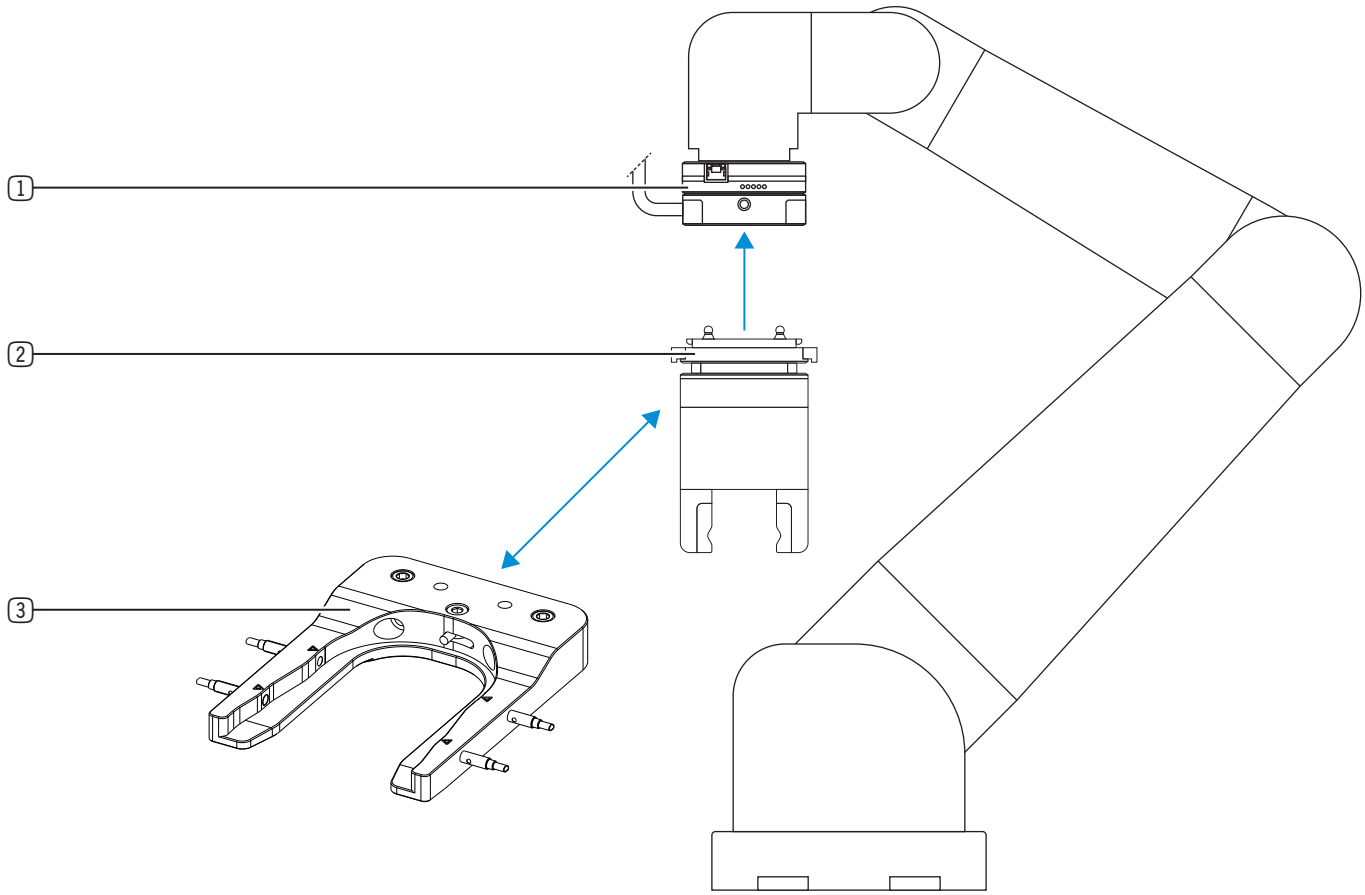

5.1 Type plate

A type plate is attached to the product.

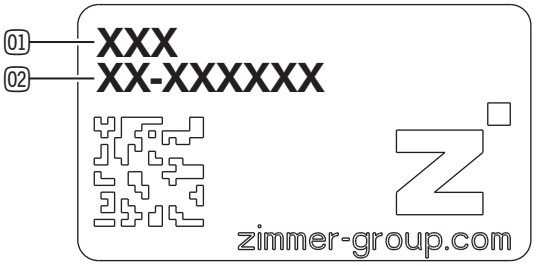

01 Article number

02 Confirmation number

5.2 Product variants and compatibility

INFORMATION

- ▶ You can find information about product variants and their compatibility on our website.
- ▶ Please contact Customer Service if you have any questions.

6 Functional description

The robot module and gripper are coupled manually or automatically via a storage station. When moving out of the storage station, the gripper automatically locks with the robot module.

When they are coupled, the internal spring contacts are contacted for signal transmission.

Then, the Connect LED changes color from red to green and, depending on the variant, a Connect signal is passed to the higher-level control system.

The hot-plug function enables coupling and decoupling while electrified.

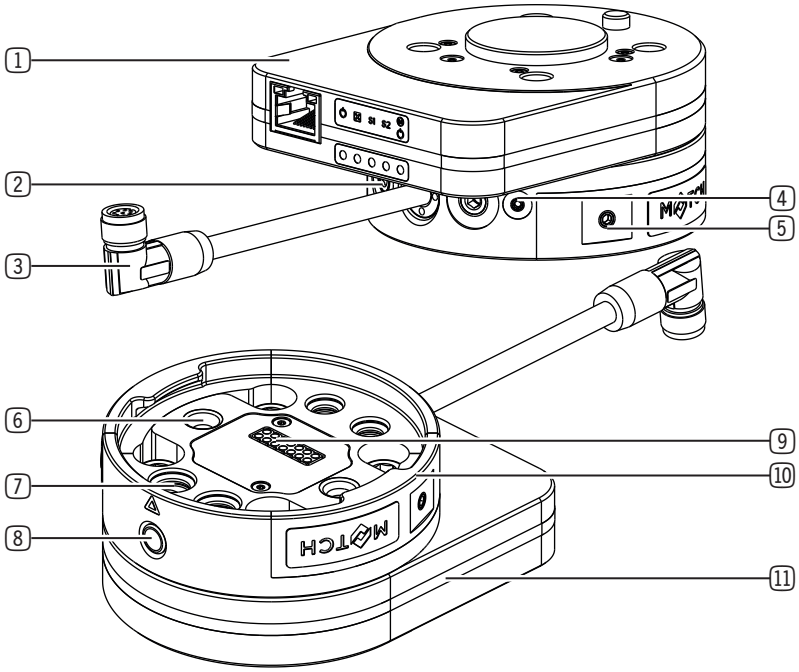

1 Smart Communication Module

2 Pneumatic connection

3 Connecting line

4 Grounding

5 Strain relief

6 Bracket for centering pin

7 Pneumatic feedthrough

8 Connect LED, Freedrive

9 Spring contacts

10 Locking

11 Status display

The SCM is used to control the gripper. Up to 15 workpieces can be configured and saved in the SCM setup via the workpiece number. The workpieces are selected using binary coding, which is evaluated via four digital inputs on the SCM. Each combination stands for a specific workpiece.

The desired workpieces can be selected via a signal at the inputs of the SCM. If there are no digital signals from the robot on the SCM, workpiece 1 is selected by default.

Work piece	Cmd_WP_			
	Bit0	Bit1	Bit2	Bit3
1	0	0	0	0
1	1	0	0	0
2	0	1	0	0
3	1	1	0	0
4	0	0	1	0
5	1	0	1	0
6	0	1	1	0
7	1	1	1	0
8	0	0	0	1
9	1	0	0	1
10	0	1	0	1
11	1	1	0	1
12	0	0	1	1
13	1	0	1	1
14	0	1	1	1
15	1	1	1	1

6.1 LED status display

The Connect LED indicates whether the robot module and gripper are coupled.

The colors of the status display indicate the status of the coupled IO-Link product.

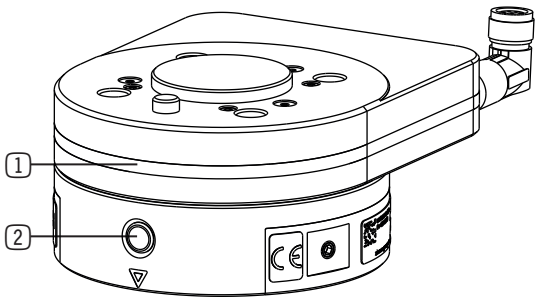

1 Status display

2 Connect LED, Freedrive

6.1.1 Connect LED

Status		Meaning	Measure
	LED does not light up.	• Supply voltage is not OK	▶ Connect the supply voltage.
🔴	LED lights up continuously red.	• Robot module not coupled.	▶ Couple the robot module.
🟢	LED lights up continuously green.	• Robot module coupled.	-

6.1.2 Status display

Status		Meaning Zimmer Group GmbH	Measure Zimmer Group GmbH	Meaning for Schmalz GmbH	Measure for Schmalz GmbH
	LED does not light up.	• No supply voltage	▶ Connect the supply voltage.	• No supply voltage	▶ Connect the supply voltage.
	LED flashes red.	Error	▶ Check the IO-Link device.	Error	▶ Check the IO-Link device.
	LED lights up continuously red.	• IO-Link device is disconnected.	▶ Establish a connection to the IO-Link device.	• IO-Link device is disconnected.	▶ Establish a connection to the IO-Link device.
	LED flashes red 2x.	• SCM starts with high SCM input. • IO-Link device switches with high SCM input.	▶ Set the SCM input = 0.	• SCM starts with high SCM input. • IO-Link device switches with high SCM input.	▶ Set the SCM input = 0.
	LED flashes red 3x.	• Workpiece invalid for connected IO-Link device. • No workpiece defined.	▶ Select a valid workpiece. ▶ Teach the workpiece.	• Workpiece invalid for connected IO-Link device. • No workpiece defined.	▶ Select a valid workpiece. ▶ Teach the workpiece.
	LED flashes red 4x.	• No connection to the IO-Link device	▶ Install the current HMI software. ▶ Connect the product to the Windows PC. ▶ Start the software. ⇨ The database is updated.	• No connection to the IO-Link device	▶ Install the current HMI software. ▶ Connect the product to the Windows PC. ▶ Start the software. ⇨ The database is updated.
	LED flashes red 5x.	• Communication error	▶ Restart the SCM. ▶ Please contact Customer Service.	• Communication error	▶ Restart the SCM. ▶ Please contact Customer Service.
	LED flashes red 6x.	• Communication error	▶ Restart the SCM. ▶ Please contact Customer Service.	• Communication error	▶ Restart the SCM. ▶ Please contact Customer Service.
	LED flashes white.	• Unknown IO-Link device	-	• Unknown IO-Link device	-
	LED lights up continuously yellow.	• IO-Link device at UndefinedPosition	-	-	-
	LED lights up continuously orange.	• Taught-in workpiece gripped	-	• Warning	▶ Check the IO-Link device.
	LED lights up continuously green.	• IO-Link device at end position • No taught-in workpiece gripped.	-	• Workpiece vacuumed (vacuum > H2)	-
	LED lights up continuously blue.	• IO-Link device moving	-	• Neutral state (vacuum > H2)	-

6.1.3 Basic module

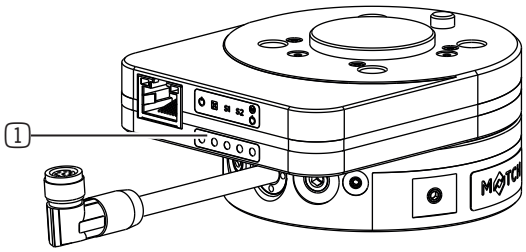

1 LED display

Icon	Status		Meaning	Measure
⏻		LED lights up continuously green.	• Supply voltage OK	-
		LED flashing green.	• HMI is connected, the SCM is teaching the IO-Link device.	-
		LED flashes yellow.	• HMI assumes control, the IO module LEDs are off.	-
		LED does not light up.	• Supply voltage is not OK	▶ Check the supply voltage.
☒		LED lights up continuously red.	Error	▶ Connect the supply voltage.
S1/S2 (IO-Link-Device)		LED does not light up.	• No supply voltage	▶ Restart the SCM. ▶ Please contact Customer Service.
		LED lights up continuously red.	Error	▶ Connect the supply voltage.
		LED flashes red.	• IO-Link device is disconnected.	▶ Check the IO-Link device.
		LED flashes red 2x.	• SCM starts with high SCM input. • IO-Link device switches with high SCM input.	▶ Establish a connection to the IO-Link device.
		LED flashes red 3x.	• Workpiece invalid for connected IO-Link device. • No workpiece defined.	▶ Set the SCM input = 0.
		LED flashes red 4x.	• IO-Link device not recognized.	▶ Install the current HMI software. ▶ Connect the product to the Windows PC. ▶ Start the software. ⇨ The database is updated.
		LED flashes red 5x.	• Communication error	▶ Restart the SCM. ▶ Please contact Customer Service.
		LED flashes red 6x.	• Communication error	▶ Restart the SCM. ▶ Please contact Customer Service.
		LED flashes white.	• Unknown IO-Link device	-
		LED lights up continuously yellow.	• Gripper in end position or no workpiece gripped.	-
		LED lights up continuously orange.	• Taught-in workpiece gripped	-
		LED lights up continuously green.	• IO-Link device moving	-
		LED lights up continuously blue.	• IO-Link device at Undefined-Position	-

Icon	Status		Meaning	Measure
⏻ Ⓜ	🟢	LED lights up continuously green.	• Actuator voltage OK	-
		LED does not light up.	• Actuator voltage not OK	► Use a compatible IO-Link device.

6.2 Functional safety

NOTICE

Malfunction in case of non-compliance

Extending out of the storage station can lead to high-frequency vibrations of the robot depending on the robot being used.

- ► Please note that in rare cases these vibrations can lead to communication setup malfunctions with the gripper.
- ► In these situations, make sure that the actuator power supply, signal power supply and communication are disconnected when the device is extended out of the storage station.
  - ► Only switch on the power supply at all contacts after the device is completely extended from the storage station (cold plug).

For the overall safety of the function, all three components (robot module, gripper and storage station) must be taken into account.

The safety function of the product that ensures secure locking between the robot module and gripper is implemented via a pneumatic action channel that consists of a mechanical locking and springs.

Technical supplementary safety measures (sensors) provide a high degree of diagnostic coverage.

Fault elimination in accordance with DIN EN ISO 13849-2, Annex A, Table A2 and A3 for the helical compression springs used can be given.

7 Technical data

INFORMATION

- ► You can find the information in the technical data sheet on our website.

This data varies within the series, depending on the specific design.

8 Accessories/scope of delivery

INFORMATION

If any accessories not sold or authorized by Zimmer Group GmbH are used, the function of the product cannot be guaranteed. Zimmer Group GmbH accessories are specifically tailored to the individual products.

- ► For optional accessories and those included in the scope of delivery, refer to our website.

9 Transportation/storage/preservation

- ► Transport and storage of the product must be done only with the original packaging.
- ► If the product has already been installed on the superordinate machine unit, care must be taken during transport to ensure that no unexpected movements can occur.
  - ► Before commissioning the product and after transport, check all power and communication connections as well as all mechanical connections.
- ► If the product is stored for an extended period, the following points are to be observed:
  - ► Keep the storage location as dust-free and dry as possible.
  - ► Avoid temperature fluctuations.
  - ► Avoid wind/drafts/water condensation formation.
  - ► Pack the product and do not expose it to direct sunlight during storage.
- ► Clean all components. There must be no soiling left on the components.
- ► Visually inspect all components.
- ► Remove all foreign substances.
- ► Properly remove potential corrosion spots.
- ► Close electrical connections using suitable covers.

10 Installation

WARNING

Risk of injury due to uncontrolled movements

Risk of injury in case of unexpected movement of the machine or system into which the product is to be installed.

- ▶ Switch off the energy supply of the machine before any work.
- ▶ Secure the power supply against being switched on unintentionally.
- ▶ Check the machine for any residual energy that may be present.

Assembly requirements	
Permissible flatness tolerance [mm]	0,03
Strength class of the mounting screws	8.8

INFORMATION

Further installation information:

- The mounting screws are not included in the scope of delivery.

- ▶ Install the product on an appropriate mounting surface in accordance with the flatness specifications.
- ▶ Make sure that the mounting piece is sufficiently rigid.
- ▶ Ensure the cleanliness of the connection surfaces.
- ▶ Please note the permitted tightening torques of the mounting screws at www.zimmer-group.com/en/td.

10.1 Installing the product

- ▶ Position the product on the robot using the straight pin.
- ▶ Insert the centering collar into the robot arm.
- ▶ Mount the product using the mounting screws.

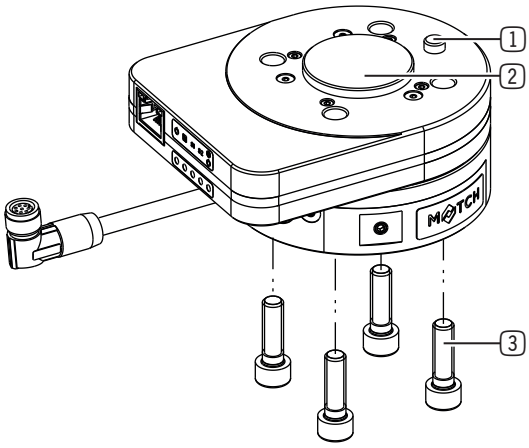

1 Straight pins

2 Centering collar

3 Mounting screw

10.2 Installing the entire system

- ▶ Install the hardware.
- ▶ Establish the electrical connections at the robot control system.
- ▶ Install the HMI software and teach in the workpieces.
- ▶ Install the Comfort app.
- ▶ For more information, see the operating instructions for the robot-specific Comfort App.

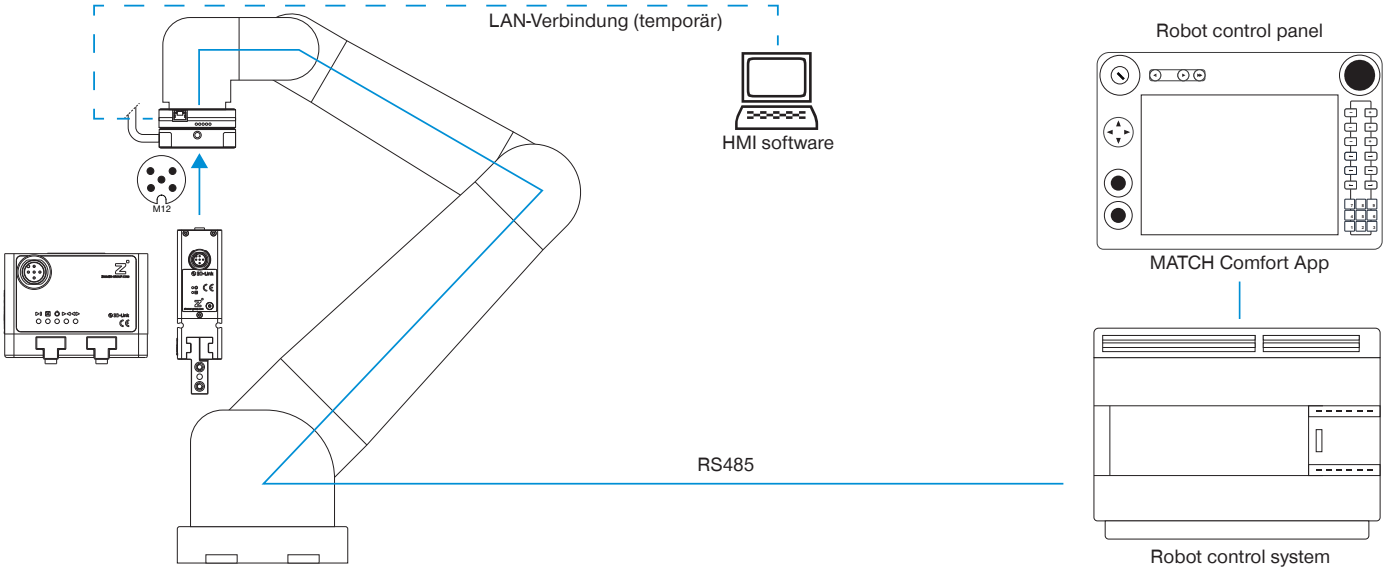

10.3 Installing the energy supply

10.3.1 Installing the pneumatic system

- ▶ Unscrew the grub screws.
- ▶ Mount the screw fittings in the provided connections.

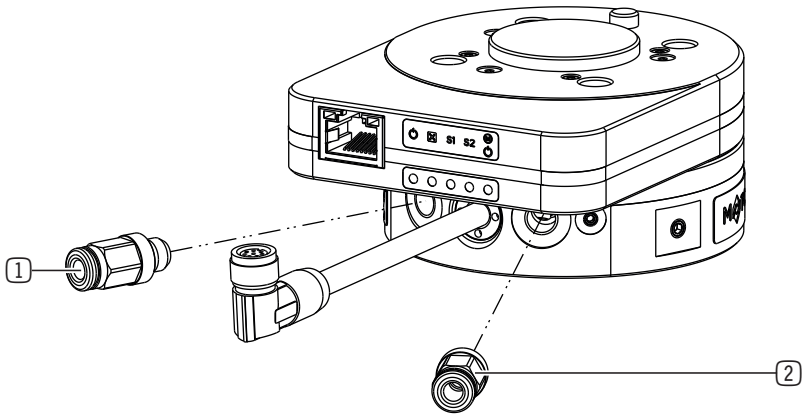

1 Close gripper

2 Open gripper

10.3.2 Installing the electrical system

CAUTION

Risk of injury from getting caught in the connecting cable

While the robot is moving, hair or limbs can be caught in the connecting cable.

- ▶ Route the connecting cable as close as possible to the robot arm.
- ▶ Avoid the danger zone.

NOTICE

Material damage and malfunction in case of non-compliance

The cable mounted on the product can be subjected to a torsional angle of +50°.

- ▶ Do not route the cable so that it is strained.
- ▶ You must meet the minimum bending radius of 10x the outer diameter.
- ▶ Secure free-hanging cables to prevent excessive motion loads or pinching.
- ▶ The contacts of the energy supply must be dry, clean and undamaged at all times.

- ▶ Switch off the voltage supply on the robot tool I/O.
- ▶ Connect the product to the robot control system.

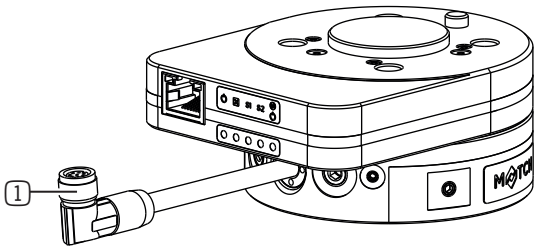

1 Connecting line

10.3.2.1 LWR50F-01-03-A, LWR50F-09-03-A

Pin	Color	Function	Explanation	Female connector, M8
1	White	signal	RS485+	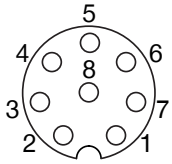
2	Brown	signal	RS485-	
3	Green	Output 2	Connect signal: 24 V DC, if gripper is coupled with robot module.	
4	Yellow	Output 1	Freedrive signal: 24 V DC if Freedrive button is pressed.	
5	Gray	PWR	24 V DC supply voltage	
6	-	-	-	
7	-	-	-	
8	Red	GND	0 V DC supply voltage	

10.3.2.2 LWR50F-31-03-A

Pin	Color	Function	Explanation	Male connector, M8
1	White	signal	RS485-	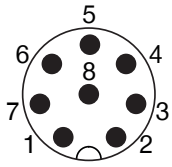
2	Brown	signal	RS485+	
3	-	-	-	
4	-	-	-	
5	Gray	PWR	24 V DC supply voltage	
6	Pink	Output 1	Freedrive signal: 24 V DC if Freedrive button is pressed.	
7	Blue	Output 2	Connect signal: 24 V DC, if gripper is coupled with robot module.	
8	Red	GND	0 V DC supply voltage	

10.4 Static charge

NOTICE

Material damage from static charge

Electrostatic voltages can occur if the product is mounted on insulating surfaces and no effective dissipation of static charges is possible.

- ► Please note that ESD-sensitive parts can be damaged if they come into contact with the product.
- ► Ground the product for applications that require high EMC resistance.

10.5 Heat dissipation

NOTICE

Material damage from overheating of the product

If the product is operated under a very high ambient temperature or with fast clock cycles on an ongoing basis, this can reduce its service life.

- ► If the product is exposed to high ambient temperatures, always install it on heat-conducting materials.
- ► Reduce the load with increasing temperature.

10.6 Installing accessories

NOTICE

Non-compliance may result in material damage.

- ► Before installing an accessory, make sure it is suitable for use with the selected variant.
- ► You can find information on our website.
- ► Please contact Customer Service if you have any questions.

11 Installation

INFORMATION

► For information, refer to the commissioning instructions for the HMI.

12 Commissioning

NOTICE

Exclusion of liability regarding unauthorized use

This product may only be used for the proper use described in this documentation.

In particular, the following actions are prohibited:

- Tampering with the product or software
- Bypassing or disabling security mechanisms
- Unauthorized access to the product or interfaces

► Please note that the manufacturer assumes no liability for any resulting damage.

► Please note that warranty and support claims will be void in the event of misuse.

INFORMATION

► For information, refer to the commissioning instructions for the HMI.

13 Operation

13.1 Operating Freedrive

INFORMATION

Freedrive is only available for the product LWR50F-01-03-A.

INFORMATION

► Details about activation can be found in the information from the robot manufacturer.

The product is equipped with a Freedrive button to soft-switch the robot and move it manually.

► Press and hold the Freedrive button.

⇨ The robot can be moved manually.

► Move the robot to the desired position.

► Release the Freedrive Button again as soon as you have reached the desired position.

⇨ The robot and product stop at this position.

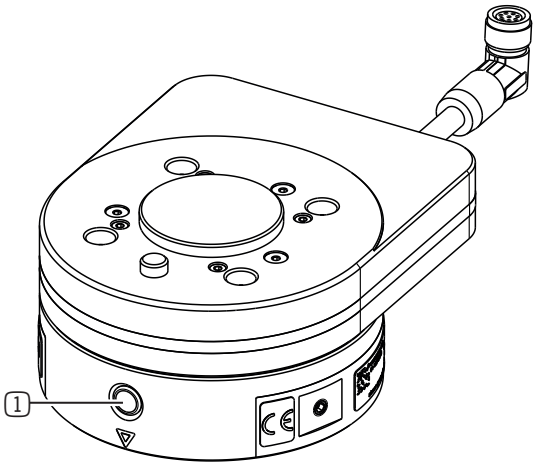

14 Error diagnosis

INFORMATION

- ▶ For further information on troubleshooting for grippers, refer to the current instructions of the gripper on our website.
- ▶ Please contact Customer Service if you have any questions.

15 Maintenance

NOTICE

Material damage resulting from blowing out with compressed air

Blowing out the product with compressed air can cause malfunctions.

- ▶ Never purge the product with compressed air.

NOTICE

Material damage caused by unsuitable cleaning materials

Seals, insulation, coatings and other surfaces may be damaged by solvent-based cleaning agents.

- ▶ Make sure that no liquids penetrate the product.
- ▶ Use chemically and biologically neutral cleaning agents.
- ▶ Use cleaning agents that are categorized as being nonhazardous to health.
- ▶ Use soft, lint-free cloths for cleaning the surface.

The use of the following cleaning agents is strictly prohibited:

- Acetone
- Cleaning solvent
- Nitrocellulose thinner/turpentine oil (solvents)

Operation of the product is maintenance-free.

- ▶ Note that the product could become damaged under the following circumstances:
- Dirty environment
- Improper use and use that does not comply with the performance data
- Permissible temperature range not observed
- ▶ Even though the product is maintenance-free as mentioned above, perform a regular visual inspection to check for any damage or contamination.
- ▶ Have maintenance work that requires disassembly of the product performed by customer service only.
- ⇨ Dismantling and reassembling the product without authorization may result in complications, as special installation equipment is required in some cases. Zimmer Group GmbH accepts no liability for any resulting malfunctions or damage.

16 Resetting to factory settings

NOTICE

Malfunction in case of non-compliance

When a reset to factory settings is performed, all saved information is deleted.

- ▶ For more information, see the operating instructions for the robot-specific Comfort App.

17 Decommissioning/disposal

INFORMATION

When the product reaches the end of its operational phase, it can be disposed of.

- ▶ Disconnect the product completely from the power supply.
- ▶ Comply with the locally applicable environmental and disposal regulations.

18 RoHS declaration

in terms of the EU Regulation 2011/65/EU

Name and address of the manufacturer:

Zimmer Group GmbH

Am Glockenloch 2
77866 Rheinau, Germany
+49 7844 9138 0
info@zimmer-group.com
www.zimmer-group.com

We hereby declare that the incomplete machine described below

Product designation: MATCH robot module

Type designation: LWR50F-01-03-A, LWR50F-09-03-A, LWR50F-31-03-A

conforms to the requirements of the directive in its design and the version we put on the market.

Michael Hoch	Rheinau, Germany, 2021-04-01	
Authorized representative for compiling the relevant technical documents	(Place and date of issuance)	Martin Zimmer (Legally binding signature) Managing Partner

19 Declaration of Incorporation (Machinery Directive)

In terms of the EU Machinery Directive 2006/42/EC (Annex II 1 B)

Name and address of the manufacturer:

Zimmer Group GmbH

Am Glockenloch 2
77866 Rheinau, Germany
+49 7844 9138 0
info@zimmer-group.com
www.zimmer-group.com

We hereby declare that the incomplete machine described below

Product designation:	MATCH robot module
Type designation:	LWR50F-01-03-A, LWR50F-09-03-A, LWR50F-31-03-A

conforms to the requirements of the Machinery Directive, 2006/42/EC, Article 2g, Annex VII, b – Annex II, b, in its design and the version we put on the market.

We hereby confirm that all the relevant basic health and safety requirements for the product have been observed and implemented.

A full list of applied standards can be obtained from the manufacturer.

We also declare that the specific technical documents were produced in accordance with Annex VII Part B of this Directive. We undertake to provide the market supervisory bodies with electronic versions of special documents for the incomplete machine through our documentation department, should they have reason to request them.

The incomplete machine may only be commissioned if it has been ascertained, if applicable, that the machine or system in which the incomplete machine is to be installed satisfies the requirements of Directive 2006/42/EC on Machinery and an EC Declaration of Conformity has been drawn up in accordance with Annex II 1 A.

Kurt Ross	Rheinau, Germany, 2021-04-01	
Authorized representative for compiling the relevant technical documents	(Place and date of issuance)	Martin Zimmer (Legally binding signature) Managing Partner

20 Declaration of Incorporation

In terms of the EU Machinery Regulation 2023/1230, Annex V, Part B

Name and address of the manufacturer:

Zimmer Group GmbH

Am Glockenloch 2
77866 Rheinau, Germany
+49 7844 9138 0
info@zimmer-group.com
www.zimmer-group.com

We hereby declare that the incomplete machine described below

Product designation:	MATCH robot module
Type designation:	LWR50F-01-03-A, LWR50F-09-03-A, LWR50F-31-03-A

in their design and in the version we have placed on the market comply with the requirements of Regulation 2023/1230, Article 3.10, Annex III, Annex IV, Part B and Annex V, Part B.

A complete list of the standards applied and the essential health and safety requirements is available from the manufacturer.

The incomplete machine must not be commissioned until it has been determined that - where applicable - the machine into which the incomplete machine is to be incorporated complies with the provisions of EU Machinery Regulation 2023/1230 and the EC Declaration of Conformity has been issued in accordance with Annex V, Part A.

Kurt Ross	Rheinau, Germany, 2027-01-20	
Authorized representative for compiling the relevant technical documents	(Place and date of issuance)	Martin Zimmer (Legally binding signature) Managing Partner

21 Declaration of Conformity

As defined by the EC Directive 2014/30/EU on electromagnetic compatibility

Name and address of the manufacturer:

Zimmer Group GmbH
Am Glockenloch 2
77866 Rheinau, Germany
+49 7844 9138 0
info@zimmer-group.com
www.zimmer-group.com

We hereby declare that the product described below

Product designation:	MATCH robot module
Type designation:	LWR50F-01-03-A, LWR50F-09-03-A, LWR50F-31-03-A

conforms to the requirements of the Electromagnetic Compatibility Directive 2014/30/EU in its design and the version we put on the market.

The following harmonized standards have been used:

DIN EN ISO 12100	Safety of machinery - General principles for design - Risk assessment and risk reduction
DIN EN 61000-6-3	EMC Generic standard, Emission standard for residential, commercial and light-industrial
DIN EN 61000-6-2	EMC Generic standard, Emission standard for industrial environments
DIN EN 61000-6-4	EMC Generic standard, Immunity for industrial environments

A full list of applied standards can be obtained from the manufacturer.

Kurt Ross	Rheinau, Germany, 2021-04-01	
Authorized representative for compiling the relevant technical documents	(Place and date of issuance)	Martin Zimmer (Legally binding signature) Managing Partner