INSTALLATION AND OPERATING INSTRUCTIONS

Compact axis

ACS

CANopen

DDOC02148

THE KNOW-HOW FACTORY

www.zimmer-group.com

Glossary

Term	Explanation
Baud rate	Data transmission rate via the controller area network (CAN).
Bus off	Status that occurs as soon as the error counter exceeds value 255. The node separates from the CAN bus and stops sending data.
CANopen	A communication protocol that is based on the controller area network (CAN).
CiA 402	Device profile in the CANopen standard that specifies the communication and functionality of electric drive and motion control devices. It defines the structure of the data objects, communication parameters and the behavior of products within a CANopen network.
EMCY/ Emergency object	Communication object that is sent by the product to the control system when a problem occurs.
Error control event	A heartbeat protocol (NMT slave or NMT master) or a life guarding protocol (NMT consumer) have occurred.
NMT/Network management	NMT protocols are used for network initialization, error monitoring and device status management. NMT objects are used to execute NMT services.
Node ID	Unique identifier that is assigned to a product within a CANopen network.
NVM/Non-volatile memory	Type of product memory that is non-volatile. The saved data are retained even after the power supply is interrupted.
Operational	Status in which all services can be used and it is the normal operating state.
PDO/ Process data object	Communication object that is used to exchange process data between products in a CANopen network. A PDO typically contains information about the status or measured values of a product and is used to transfer real time data between network participants.
Power cycle	Cycle in which the logic and actuator voltage of the product is switched off for min. 5 s, then switched back on.
Pre-operational	Status in which all services are possible except for PDOs. This status is used primarily for product configuration.
RPDO/Receive PDO	Communication object that is used to write cyclical data in objects to the product.
SDO/ Service data object	Communication object that is used to transfer data between products in a CANopen network. SDOs are used to securely and efficiently exchange data objects such as variables, parameters or configuration settings. They enable bidirectional communication and can be used both for reading as well as writing data. SDOs play an important role in the configuration and diagnostic process of CANopen networks.
Control system	Device that is used to control a product. A control system could be a PLC, CANopen master or similar device.
Stopped	Status in which only NMT services and error monitoring are possible.
STO/Safe torque off	Safety function of drives that prevents any torque from being generated in case of an emergency stop, even if the product is still connected to the voltage supply.
TPDO/Transmit PDO	Communication object that sends cyclical data from the product to the control system.
Warning limit reached	At least one of the error counters has reached or exceeded the number of maximum errors.

EN / 2026-10-14
DDOC02148 / e

Data type	Explanation
UINT8	unsigned 8 bits
UINT16	unsigned 16 bits
UINT32	unsigned 32 bits
INT8	signed 8 bits
INT16	signed 16 bits
INT32	signed 32 bits
FLOAT	Simple floating point number with 32 bits (see IEEE 754)

Contents

1 Introduction 6
1.1 Supporting documents 6
1.2 Notices and graphics in the installation and operating instructions 7

2 Safety notices 8

3 Proper use 9

4 Personnel qualification 10
4.1 Electricians 10
4.2 Specialists 10
4.3 Instructed personnel 10
4.4 Service personnel 10
4.5 Additional qualifications 10

5 Product description 11
5.1 Connections for product variants with STO 12
5.2 Connections for product variants without STO 12
5.3 LED display 13
5.4 Type plate 13

6 Functional description 13
6.1 Position measurement system 13

7 Technical data 14

8 Accessories/scope of delivery 14

9 Transportation/storage/preservation 14

10 Installation 15
10.1 Installing the product 16
10.1.1 Installing the product with mounting screws 16
10.1.2 Installing the product with clamping claws 17
10.2 Combining products 18
10.3 Installing additional components 19
10.4 Installing the power supply 19
10.4.1 PIN assignment of the STO 20
10.4.2 PIN assignment for CANopen 20
10.4.3 Static charge 21
10.5 Heat dissipation 21

11 Commissioning 22
11.1 Communication 22
11.1.1 CANopen 22
11.1.2 CiA 402 device drive profiles 22
11.2 Quickstart 23
11.2.1 Cyclical data 23
11.2.2 Example: Operational state 24
11.3 Status of the LEDs 27
11.3.1 LED communication 27
11.4 Additional functions 28
11.4.1 Changing node IDs 28
11.4.2 Changing baud rates 28
11.4.3 Changing the PDO mapping 29
11.4.4 Saving parameters to NVM 29
11.4.5 Setting control parameters 29
11.5 Restoring default settings 30

DDOC02148 / e EN / 2026-10-14

11.6 Activating clamping elements ... 30

12 Error diagnosis ... 30

13 Parameter settings ... 31
13.1 Control parameters ... 31
13.1.1 POS_KP ... 31
13.1.2 VEL_KP ... 31
13.1.3 VEL_KI ... 31
13.1.4 POS_KFFV ... 31
13.1.5 POS_KFFA ... 32
13.1.6 VEL_KFFA ... 32
13.1.7 VEL_FBK_FIL_1_FREQ ... 32
13.2 Default parameters ... 32
13.2.1 ACS40 ... 32
13.2.2 ACS60 ... 32
13.3 Parameter settings for horizontal installation ... 33
13.3.1 ACS40 ... 33
13.3.2 ACS60 ... 33

14 STO diagnostic test ... 34

15 Appendix ... 35
15.1 Finite state machine CiA 402 ... 35
15.1.1 ControlWord ... 35
15.1.2 StatusWord ... 38
15.2 CANopen network management (NMT) ... 40
15.3 NMT finite state machine ... 40
15.4 Error diagnosis ... 41
15.5 SDO table ... 43

16 Maintenance ... 50
16.1 Safe Torque Off (STO) ... 51
16.1.1 Safety specifications ... 51
16.1.2 STO diagnostic test ... 51
16.1.3 STO operating statuses ... 52
16.2 Relubricating the product ... 53

17 Decommissioning/disposal ... 53

18 RoHS declaration ... 54

19 Declaration of Incorporation (Machinery Directive) ... 55

20 Declaration of Incorporation ... 56

21 Declaration of Conformity ... 57

EN / 2026-10-14

DDOC02148 / e

1 Introduction

1.1 Supporting documents

NOTICE

Read through the installation and operating instructions before installing or working with the product.

The installation and operating instructions contain important notes for your personal safety. They must be read and understood by all persons who work with or handle the product during any phase of the product lifetime.

The documents listed below are available for download on our website www.zimmer-group.com:

- Installation and operating instructions
- Catalogs, drawings, CAD data, performance data
- Information on accessories
- Technical data sheets
- General Terms and Conditions (GTCs), including warranty information.

⇨ Only the documents currently available on the website are valid.

In these installation and operating instructions, “product” replaces the product designation on the title page.

1.2 Notices and graphics in the installation and operating instructions

DANGER

This notice warns of an imminent danger to the life and health of people. Ignoring these notices can lead to serious injury or even death.

- ▶ You absolutely must comply with the described measures for avoiding these dangers.
- ⇨ The warning symbols are assigned according to the type of danger.

WARNING

This notice warns of a situation that is potentially hazardous to personal health. Ignoring these notices can cause serious injury or damage to health.

- ▶ You absolutely must comply with the described measures for avoiding these dangers.
- ⇨ The warning symbols are assigned according to the type of danger.

CAUTION

This notice warns of a situation that is potentially hazardous to people. Ignoring these notices can cause minor, reversible injuries.

- ▶ You absolutely must comply with the described measures for avoiding these dangers.
- ⇨ The warning symbols are assigned according to the type of danger.

NOTICE

This notice warns of possible material or environmental damage. Ignoring these notices can result in damage to the product or the environment.

- ▶ You absolutely must comply with the described measures for avoiding these dangers.
- ⇨ The warning symbols are assigned according to the type of danger.

INFORMATION

This category contains useful tips for handling the product efficiently. Failure to observe these tips will not result in damage to the product. This information does not include any information relevant to health or workplace safety.

2 Safety notices

CAUTION

Risk of injury and material damage in case of non-compliance

Installation, commissioning, maintenance and repairs may only be performed by qualified specialists in accordance with these installation and operating instructions.

The product is state-of-the-art.

The following are examples of situations in which the product may cause a hazard:

- The product is not properly installed, used or maintained.
- The product is not used for its designated purpose.
- The locally applicable regulations, laws, directives or guidelines are not observed.

▶ The product may only be used in accordance with these installation and operating instructions and the product's technical data. Any changes or additions to the intended use of the product, as well as modifications to the product, such as those in the following examples, require the written permission of the manufacturer:

- Use of the product under extreme conditions, such as aggressive fluids or abrasive dusts
- Additional drilled holes or threads

⇨ Zimmer Group GmbH accepts no liability for any damage caused by improper use. The operator bears sole responsibility.

▶ Make sure that the power supply is disconnected before you mount, adjust, modify, maintain or repair the product.

▶ Whenever work is carried out on the product, make sure that the product cannot be actuated by mistake.

▶ Perform maintenance tasks, retrofitting or attachment work outside of the machine's danger zone when possible.

▶ Do not reach into the operational range of the product.

▶ Always perform maintenance at the required intervals.

▶ When using the product under extreme conditions, adjust the maintenance interval according to the degree of soiling.

▶ Check the completeness and tightening torques of all mounting screws.

HINWEIS

Cybersecurity

▶ The operator is responsible for ensuring that unauthorized persons do not have access to the product, either physically or remotely.

3 Proper use

NOTICE

The product is only to be used in its original state with its original accessories, with no unauthorized changes and within the stipulated parameter limits and operating conditions.

Any other or secondary use is deemed improper.

- ► Operate the product only in compliance with the associated installation and operating instructions.
- ► Operate the product only when it is in a technical condition that corresponds to the guaranteed parameters and operating conditions.
- ⇨ Zimmer Group GmbH accepts no liability for any damage caused by improper use. The operator bears sole responsibility.

- The product is designed for moving and positioning loads within automated systems.
- The product is intended for industrial use.
- The product is designated for use in enclosed rooms.
- The product is not suited for use in a potentially explosive atmosphere.
- Direct contact with perishable goods/food is not permitted.
- The product must not be operated in an environment that is subjected to magnetic dust or chips.

4 Personnel qualification

WARNING

Injuries and material damage due to inadequate qualification

If inadequately qualified personnel perform work on the product, this can cause serious injuries and significant material damage.

- ▶ All work on the product must be performed by qualified personnel.
- ▶ Before working with the product, read the document in its entirety and make sure that you have understood everything.
- ▶ Observe country-specific accident prevention regulations and the general safety notices.

The following qualifications are a prerequisite for performing various types of work on the product.

4.1 Electricians

Electricians are able to perform work on electrical systems, can recognize and avoid possible dangers and know the relevant standards and provisions due to their technical training, knowledge and experience.

4.2 Specialists

Specialists are able to perform the assigned work, can recognize and avoid possible dangers and know the relevant standards and provisions due to their technical training, knowledge and experience.

4.3 Instructed personnel

Instructed personnel have been trained by the operating company on the tasks and possible dangers of improper behavior.

4.4 Service personnel

Service personnel are able to perform the assigned work and can recognize and avoid possible dangers due to their technical training, knowledge and experience.

4.5 Additional qualifications

Personnel who work with the product must be familiar with the valid safety regulations and laws as well as the standards, guidelines and laws listed in this document.

Personnel who work with the product must have facility-issued authorization to commission, program, configure, operate, maintain and also decommission this product.

5 Product description

The product is a linear axis with an electronically controlled ball screw.
It is used for positioning loads at a precise time and location and can be used as a component in automated systems.
The product can be used to implement linear movements in a stroke range of up to 100 or 150 mm.
It is suitable for applications which have high demands for dynamics and positioning accuracy.
Depending on the variant selected, the product may feature a clamping element.
The electronics are fully integrated into the axis profile. The product can optionally be controlled using IO-Link or CANopen.

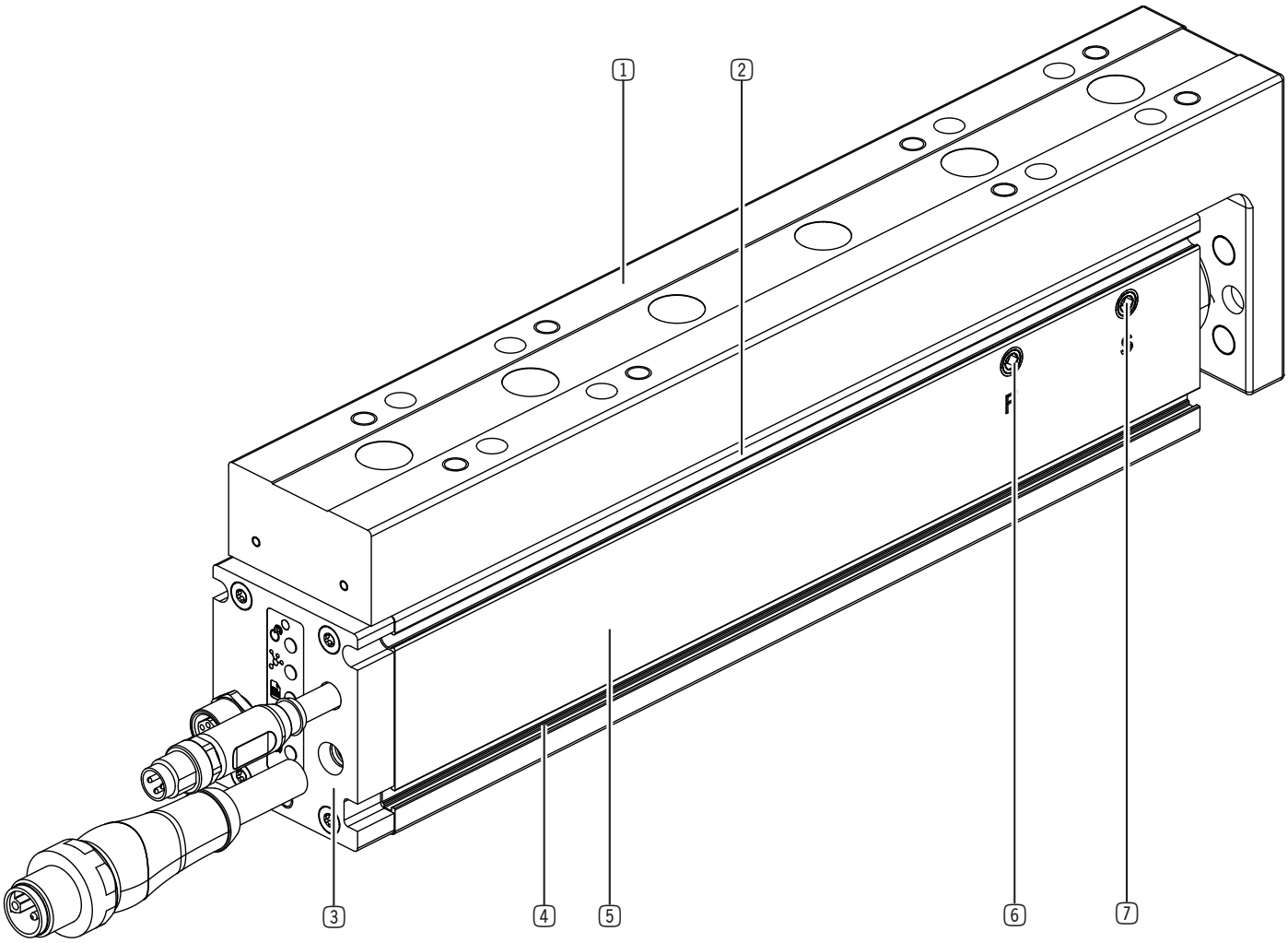

1. Carriages
2. Sensor slot
3. Cover with LED display
4. Assembly slot
5. Axis profile
6. Connections for lubricating nipples (linear guide)
7. Connections for lubricating nipples (ball screw)

5.1 Connections for product variants with STO

ACS40100CO12-01-A, ACS40100CO12-41-A

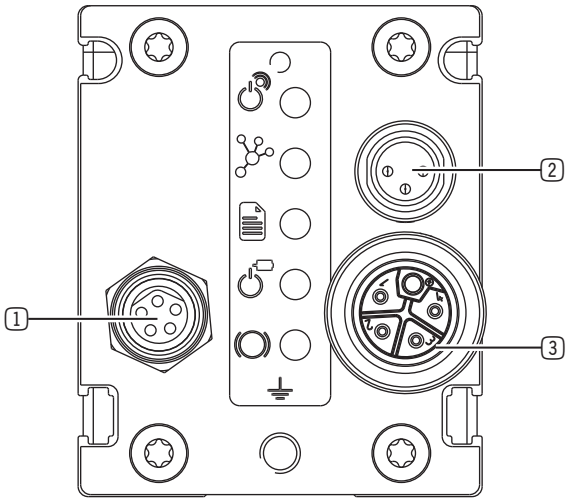

ACS60150CO20-01-A, ACS60150CO20-41-A

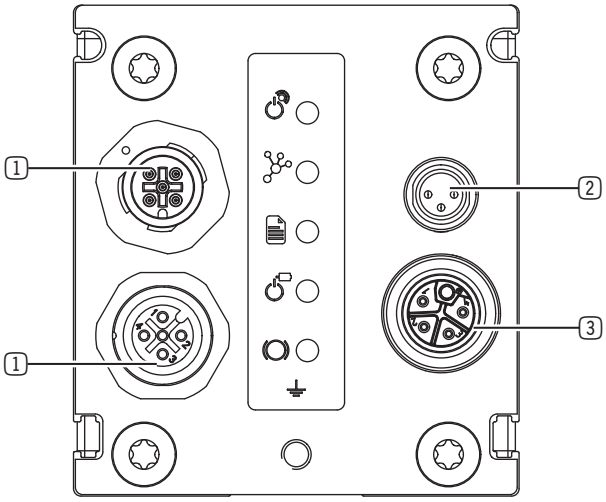

1 CANopen

2 STO

3 Power

5.2 Connections for product variants without STO

ACS40100CO12-00-A, ACS40100CO12-40-A

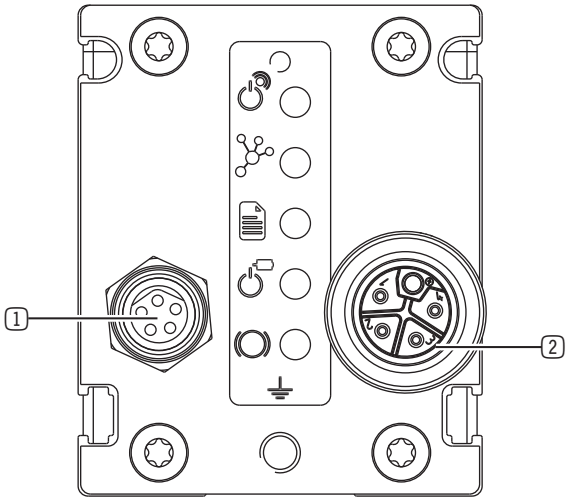

ACS60150CO20-00-A, ACS60150CO20-40-A

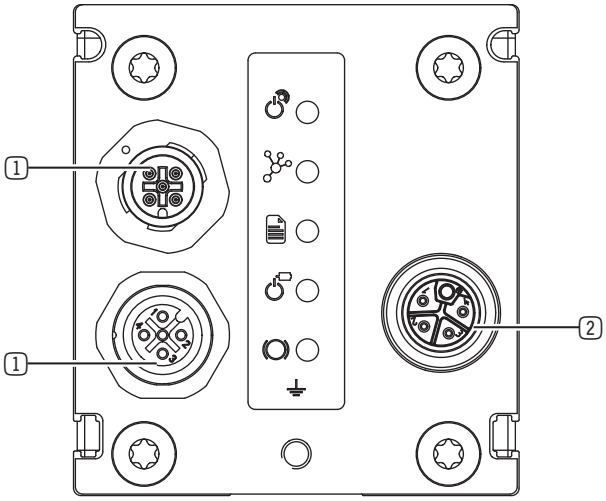

1 CANopen

2 Power

5.3 LED display

1 Logic supply

2 Communication

3 Status

4 Actuator power supply

5 Clamping element

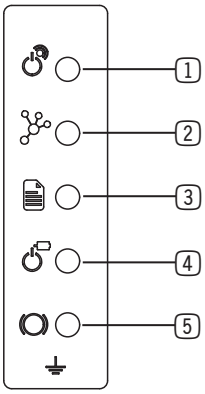

5.4 Type plate

A type plate is attached to the product.

The type plate shows the part number and serial number.

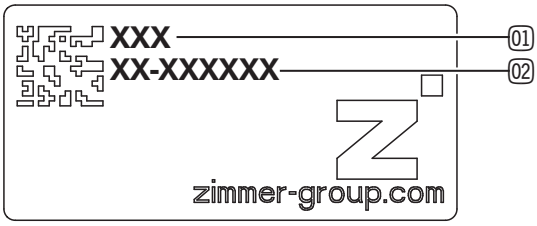

01 Part number

02 Serial number

6 Functional description

A brushless DC motor rotates a ball screw nut. The movement is transmitted to a spindle and results in a linear movement of the slide connected to it. A profile rail guide absorbs the forces and torques and ensures precise linear movement. The stroke length and speed are infinitely variable.

6.1 Position measurement system

NOTICE

Material damage caused by magnetic influences

The position measuring system can be damaged by external magnetic influences.

- ▶ Do not store the product together with magnets or other products that generate a magnetic field.
- ▶ Do not handle any tools that generate a magnetic field themselves or act as permanent magnets.
- ▶ Do not attach any magnets or components with ferromagnetic properties.

NOTICE

Material damage caused by magnetic dust and chips

Magnetic dust and chips can be attracted to the position measuring system, potentially damaging it or falsifying the measurement results.

- ▶ Use the product only in a suitable environment.
- ▶ Protect the position measuring system from the influences listed above.

7 Technical data

INFORMATION

- ► You can find the information in the technical data sheet on our website.

This data varies within the series, depending on the specific design.

- ► Please contact Customer Service if you have any questions.

8 Accessories/scope of delivery

INFORMATION

If any accessories not sold or authorized by Zimmer Group GmbH are used, the function of the product cannot be guaranteed. The accessories from Zimmer Group GmbH are specifically tailored to the individual products.

- ► For information on optional accessories and those included in the scope of delivery, refer to our website.

9 Transportation/storage/preservation

- ► Transport and store the product only in the original packaging.
- ► During transport, make sure that no uncontrolled movements can occur if the product is already mounted on the higher-level machine unit.
  - ► Prior to commissioning and after transport, check all power and communication connections as well as all mechanical connections.
- ► Observe the following points when storing the product for longer periods of time:
  - ► Keep the storage location as dust-free and dry as possible.
  - ► Avoid temperature fluctuations.
  - ► Avoid wind, drafts and formation of condensation.
  - ► Avoid direct sunlight.
- ► Clean all components until all contamination has been removed.
- ► Visually inspect all components.
- ► Remove any foreign objects.
- ► Remove potential corrosion spots properly.
- ► Seal electrical connections with suitable covers.

10 Installation

WARNING

Risk of injury due to uncontrolled movement

Risk of injury in case of uncontrolled movements of the machine or system into which the product is to be installed.

- ► Switch off the power supply of the machine before all work.
- ► Secure the power supply against being switched on unintentionally.
- ► Check the machine for any residual energy that may be present.

CAUTION

Risk of injury due to uncontrolled movement

Risk of injury in the event of uncontrolled movement of the product when the power supply is connected.

- ► Switch off the power supply to the product before all work.
- ► Secure the power supply against being switched on unintentionally.
- ► Check the product for any residual energy that may be present.

Assembly requirements	
Permissible flatness tolerance [mm]	0.1
Strength class of the mounting screws	8.8

INFORMATION

Further installation information:

- The mounting screws are not included in the scope of delivery.

- ► Install the product on an appropriate mounting surface in accordance with the flatness specifications.
- ► Make sure the mounting piece is sufficiently rigid.
- ► Ensure the cleanliness of the connection surfaces.
- ► Please note the permitted tightening torques of the mounting screws at www.zimmer-group.com/de/td.

10.1 Installing the product

WARNING

Risk of injury and material damage in case of non-compliance

If unsuitable mounting elements are used or if the number of mounting elements is insufficient, the product may tear off as a result of the load.

- ► Use suitable mounting screws.
- ► Maintain the required minimum number of mounting elements depending on the load.
- ► Comply with the permitted tightening torques of the mounting screws.
- ► Use threadlocker.

CAUTION

Material damage in case of installation without suitable support

Long axis profiles can sag in case of improper installation.

- ► Install the product with supports at multiple points depending on the axis length or on a continuous, even mounting surface.

10.1.1 Installing the product with mounting screws

- ► Use at least four mounting screws.
- ► Drill appropriately sized holes in the mounting piece.
- ► Clean the mounting surfaces.
- ► Position the product on the mounting piece using straight pins.
- ► Mount the product on the mounting piece using the appropriate mounting screws.
- ► Comply with the permitted tightening torques of the mounting screws.

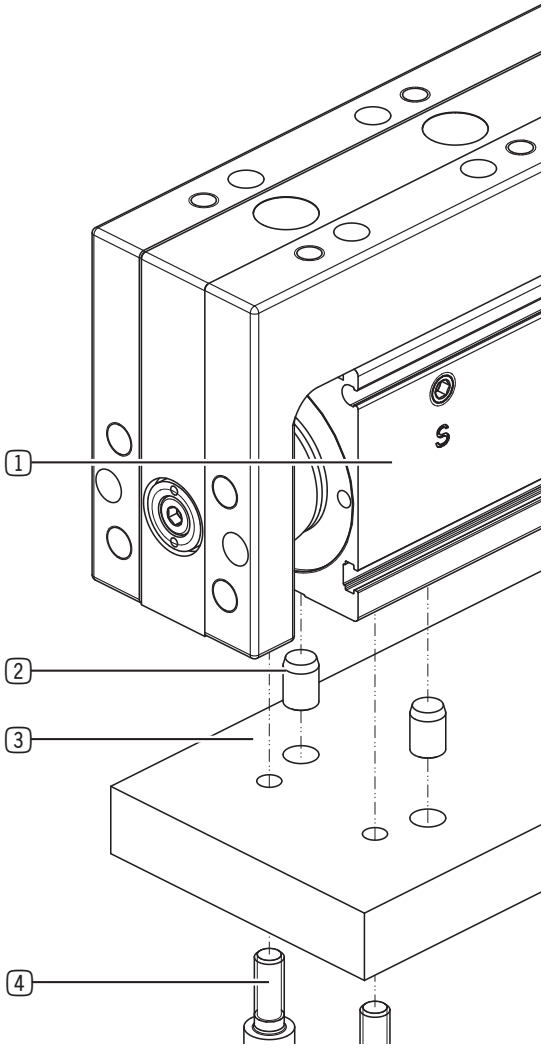

1 Axis profile

2 Straight pin

3 Mounting piece

4 Mounting screw

10.1.2 Installing the product with clamping claws

- ▶ Use at last four clamping claws with two mounting screws each.
- ▶ Drill appropriately sized holes in the mounting piece.
- ▶ Clean the mounting surfaces.
- ▶ Position the product on the mounting piece using straight pins.
- ▶ Swivel the clamping claws into the groove on the axis profile.
- ▶ Mount the product by screwing the mounting screws into the mounting piece.
- ▶ Comply with the permitted tightening torques of the mounting screws.

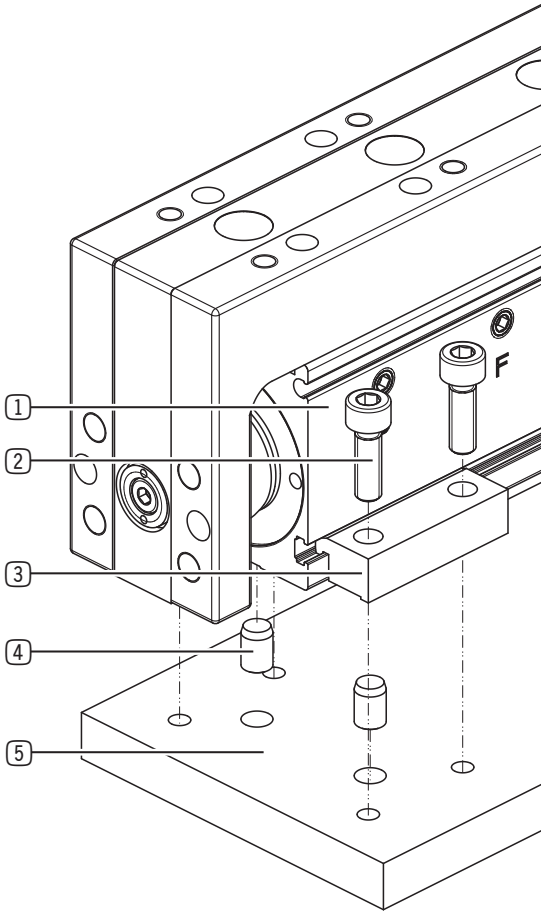

1. Axis profile
2. Mounting screw
3. Clamping claw
4. Straight pins
5. Mounting piece

10.2 Combining products

The following illustrations show two examples of combination variants.

- ► Clean the mounting surfaces.
- ► Use the corresponding mounting elements depending on the combination variant.
- ► Comply with the permitted tightening torques of the mounting screws.

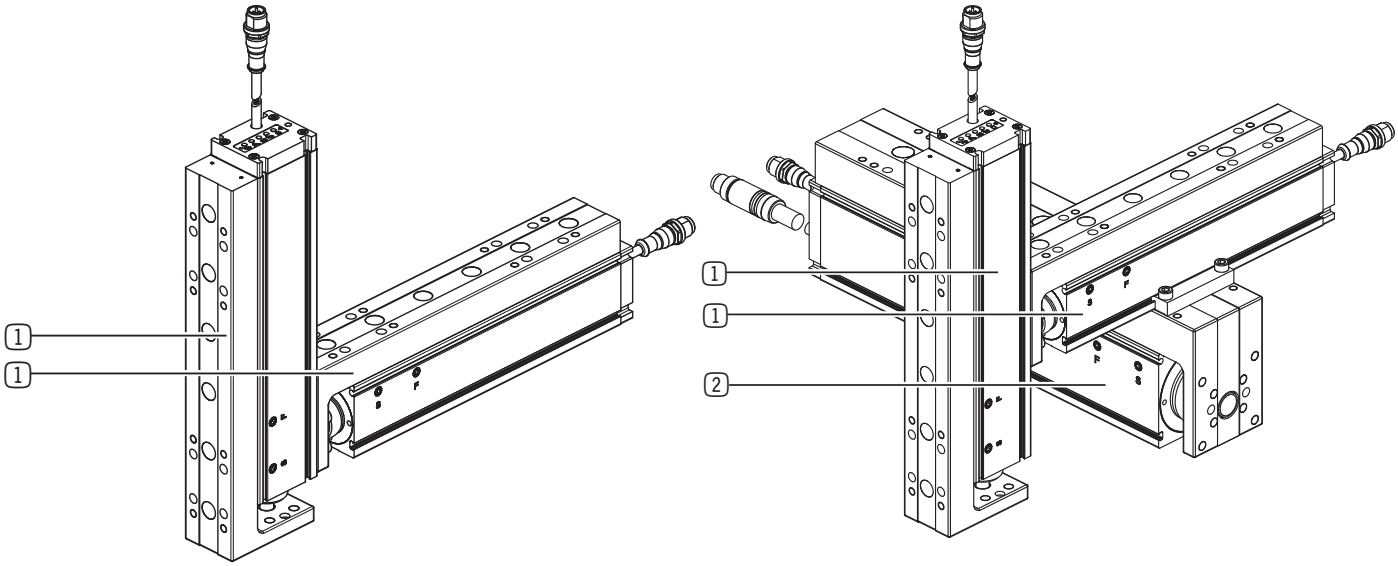

1 ACS40

2 ACS60

10.3 Installing additional components

- ► Slide size M3 low shape square nuts into the bottom slot on the axis profile.
- ► Install the desired components.

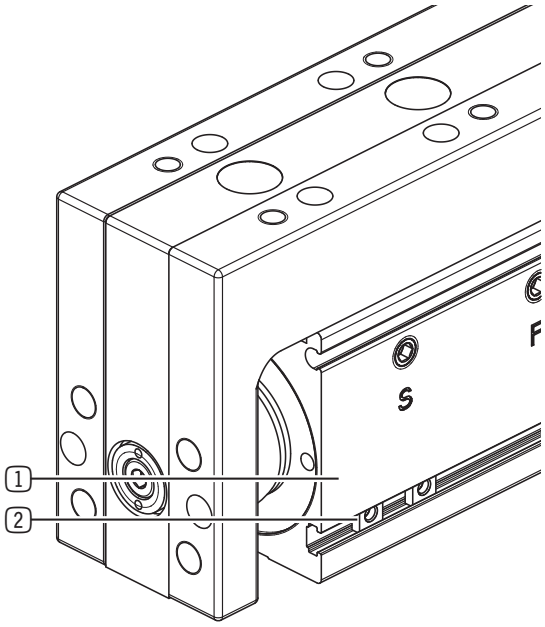

1 Axis profile

2 Square nut

10.4 Installing the power supply

WARNING

Risk of injury due to electrical voltage

Electric shocks can cause serious injuries as a result of touching parts carrying voltage.

- ► Switch off the energy supply of the machine before all work.
- ► Secure the energy supply against being switched on unintentionally.

NOTICE

Material damage in case of non-compliance

The cable mounted on the product can be subjected to a torsional angle of ± 50°.

- ► Do not route the cable so that it is strained.
- ► You must meet the minimum bending radius of 10x the outer diameter.
- ► Secure free-hanging cables to prevent excessive motion loads or pinching.
- ► The contacts of the energy supply must be dry, clean and undamaged at all times.
- ⇨ Damage to the contacts can result in malfunction of the product.

10.4.1 PIN assignment of the STO

Pin	Color	Function	Explanation
1	Brown	STO1	Control input
3	Blue	STO_RET	0 V STO ground
4	Black	STO2	Control input

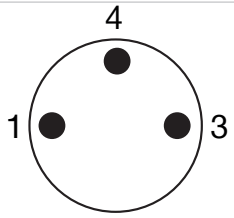

10.4.2 PIN assignment for CANopen

10.4.2.1 ACS40

Power

Pin	Color	Function	Explanation
1	Brown	Logic +	24 V logic voltage
2	White	Power -	0 V actuator voltage
3	Blue	Logic -	0 V logic voltage
4	Black	Power +	24 V actuator voltage
FE	Gray	FE	Functional ground

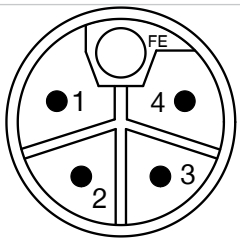

Communication

Pin	Color	Function	Explanation
1	Brown	CAN_H	Optional bus line
2	White	CAN_L	Optional bus line
3	Blue	CAN_GND	Dimensions
4	Black	CAN_H	Bus line
5	Gray	CAN_L	Bus line

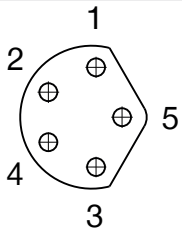

10.4.2.2 ACS60

Power

Pin	Color	Function	Explanation
1	Brown	Logic +	24 V logic voltage
2	White	Power -	0 V actuator voltage
3	Blue	Logic -	0 V logic voltage
4	Black	Power +	24 V actuator voltage
FE	Gray	FE	Functional ground

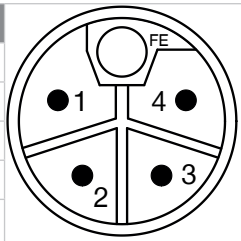

Communication

CANopen IN

Pin	Color	Function	Explanation
1	Brown	CAN_SHIELD	Optional bus line for shield Looping to PIN 1 (Socket: CANopen OUT)
2	White	CAN_V+	Optional bus line for additional supply voltage Looping to PIN 2 (Socket: CANopen OUT)
3	Blue	CAN_GND	Dimensions
4	Black	CAN_H	Bus line
5	Gray	CAN_L	Bus line

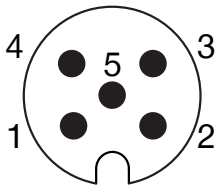

CANopen OUT

Pin	Color	Function	Explanation
1	Brown	CAN_SHLD	Optional bus line for shield Looping to PIN 1 (Plug: CANopen IN)
2	White	CAN_V+	Optional bus line for additional supply voltage Looping to PIN 2 (Plug: CANopen IN)
3	Blue	CAN_GND	Dimensions
4	Black	CAN_H	Bus line
5	Gray	CAN_L	Bus line

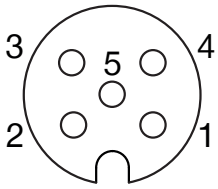

10.4.3 Static charge

NOTICE

Material damage from static charge

Grounding the product is recommended if ESD sensitive parts come into contact with the product.

Grounding is also recommended in applications that require high EMC shielding.

10.5 Heat dissipation

NOTICE

Material damage from overheating of the product

If the product is operated under a very high ambient temperature or with fast clock cycles on an ongoing basis, this can reduce its service life.

- ► If the product is exposed to high ambient temperatures, always install it on heat-conducting materials.
- ► Reduce the load as the temperature increases.

11 Commissioning

CAUTION

Risk of injury due to uncontrolled movement

Risk of injury in the event of uncontrolled movement of the product when the power supply is connected.

- ► Do not reach into the operational range of the product.
- ► Never stand within the operational range of the product.
- ► Operate the product from a safe distance behind a safety guard.

CAUTION

Risk of injury due to insufficient holding force

For product variants with a clamping element, the holding force may decrease due to frictional wear during commissioning or after prolonged periods of inactivity without the clamping mechanism being engaged.

- ► Perform regular maintenance depending on operating conditions.
- ► Follow the instructions provided by KEB Automation KG for the *COMBIPERM* product.

HINWEIS

Exclusion of liability regarding unauthorized use

This product may only be used for the proper use described in this documentation.

In particular, the following actions are prohibited:

- Tampering with the product or software
- Bypassing or disabling security mechanisms
- Unauthorized access to the product or interfaces

► Please note that the manufacturer assumes no liability for any resulting damage.

► Please note that warranty and support claims will be void in the event of misuse.

► Before commissioning, perform a functional check using production-like conditions.

► Check for proper installation by moving the slide to both end positions.

  ► Make sure that the movement meets no resistance.

11.1 Communication

The product provides a CANopen communication interface.

The basic product and communication profiles are contained in the CiA 301 specification published by CAN.

The product also implements a subset of the CiA 402 specification (CANopen device profile for drives and motion control).

11.1.1 CANopen

The following functions are supported:

- SDO/Service Data Object
- PDO/Process Data Object
  - RPDO and TPDO 1–4
  - Up to 32 bytes in RPDO and 32 bytes in TPDO
- EMCY/Emergency object
- Life guarding protocol
- Heartbeat protocol

11.1.2 CiA 402 device drive profiles

The following modes are supported:

- Profile position
- Cyclic synchronous position mode

11.2 Quickstart

INFORMATION

The default settings can be changed.

► For more information, please refer to sections "11.4.1 Changing node IDs" and "11.4.2 Changing baud rates".

Default parameters	
Node ID	40
Baud rate	500 kbps

11.2.1 Cyclical data

The default mapping is set so that the functionalities of CiA 402 can also be used solely via PDOs. The SDOs do not have to be used. Three TPDOs and two RPDOs are required in total.
The objects are specified in the following tables.

TPDO/Transmit PDO	Object	Description	Data type
1	OBJ_STATUS_WORD	StatusWord	UINT16
	OBJ_ACTUAL_POSITION	Actual position	INT32
2	OBJ_ACTUAL_VELOCITY	Actual velocity	INT32
3	OBJ_POSITION_ FOLLOWING_ERROR	Position following error	INT32
	OBJ_TORQUE_ACTUAL_ VALUE	Actual torque	INT16

RPDO/Receive PDO	Object	Description	Data type
1	OBJ_CONTROL_WORD	ControlWord	UINT16
	OBJ_POSITION_SETPOINT	Target position	INT32
2	OBJ_PROFILE_VELOCITY	Target velocity	INT32

11.2.2 Example: Operational state

```
PROGRAM MAIN
VAR
    // field device communication
    Frm0WcState AT %I*:UINT;
    Statusword AT %I*:UINT;
    ActualPosition AT %I*:DINT;
    ActualVelocity AT %I*:DINT;
    PositionFollowingError AT %I*:DINT;
    TorqueActualValue AT %I*:INT;
    ControlWord AT %Q*:UINT;
    PositionSetPoint AT %Q*:DINT;
    ProfileVelocity AT %Q*:UDINT;

    // application Dialog Input
    Acknowledge: BOOL; // Failure Reset
    Energize: BOOL; // power on drive
    Start: BOOL; // start movement
    TargetPosition: DINT; // [um] Set Position
    TargetVelocity: UDINT; // [mm/s] Set Velocity

    // application Dialog Output
    Error: BOOL; // Failure
    Energized: BOOL; // empowered on drive
    Busy: BOOL; // movement is beeing performed
    Done: BOOL; // movement finished

    // internal
    Step : INT;
END_VAR

CASE Step OF
    0: // init
        Controlword := 0; // set Zero for following Transitions
        IF statusword.3 and not statusword.6 THEN // STATUS error
        Error := TRUE;   // Failure
        Step := 10;
    ELSE
        IF not statusword.3 and statusword.6 THEN // STATUS no error
            Step := 20;
    END_IF;
END_IF;

    10: // A <Fault> - waiting for ack
        IF Acknowledge THEN // Failure Reset
            Controlword.7 := TRUE; // Transition (15) Xxxx xxxx 1xxx xxxx
            Step := 20;
        END_IF;
    20: // waiting for D <Switch on disabled> Xxxx xxxx x1xx 0000
        IF statusword.6 AND NOT statusword.3 AND NOT Energize THEN // STATUS error
            Error := FALSE; // Failure
            Controlword.7 := FALSE;
            Step := 30;
        END_IF;
    30: // D <switch on disabled> - Waiting for Energize
        IF Energize THEN
            Step := 40;
        END_IF;
    40: //Transition (2) Xxxx xxxx 0xxx x110
        Controlword.0 := FALSE;
        Controlword.1 := TRUE;
        Controlword.2 := TRUE;
        Controlword.7 := FALSE;
        Step := 45;
    45: // waiting for E <Ready To Switch On> Xxxx xxxx x01x 0001
        IF not statusword.6 and statusword.5 and not statusword.3 and not statusword.2 and not statusword.1 and statusword.0 THEN Step := 50;
        ELSE
            IF statusword.3 THEN // STATUS error
                Error := TRUE; // Failure
                Controlword.1 := FALSE;
                Controlword.2 := FALSE;
                Step := 10;
            END_IF;
        END_IF;
```

```
50: // E Ready to switch on Transition (3) Xxxx xxxx 0xxx 0111
    Controlword.0 := TRUE;
    Controlword.1 := TRUE;
    Controlword.2 := TRUE;
    Controlword.7 := FALSE;
    Step := 60;
60: // waiting for F <Switched ON> Xxxx xxxx x01x 0011
    IF not statusword.3 and not statusword.2 and statusword.1 and statusword.0 THEN Step := 70;
    ELSE
        IF statusword.3 THEN // STATUS error
            Error := TRUE; // Failure
            Controlword.0 := FALSE;
            Controlword.1 := FALSE;
            Controlword.2 := FALSE;
            Step := 10;
        END_IF;
    END_IF;
70: // F <Switched ON> Xxxx xxxx x01x 0011
    Controlword.3 := TRUE; // Transition (4) Xxxx xxxx 0xxx 1111
    Step := 80;
80: // waiting for G <Operation enabled> Xxxx xxxx x01x 0111
    IF statusword.2 THEN
        Energized:= TRUE; // empowered on drive
        Step := 90; //
    ELSE
        IF statusword.3 THEN // STATUS error
            Error := TRUE; // Failure
            Controlword.0 := FALSE;
            Controlword.1 := FALSE;
            Controlword.2 := FALSE;
            Controlword.3 := FALSE;
            Step := 10;
        END_IF;
    END_IF;
90: // G <Operation enabled> Xxxx xxxx x01x 0111
    PositionSetPoint:= TargetPosition; // [6062] Position demand value
    ProfileVelocity := TargetVelocity; //

    // waiting for start
        IF start AND ProfileVelocity > 0 THEN //
            Step := 100; //
        END_IF;
100: // start movement
    Controlword.4 := TRUE; // Transition (yx) Xxxx xxxx 0xx1 1111
    Step := 110; //
110: // waiting for acknowlege
    IF statusword.12 THEN // Setpoint ack
        busy:= TRUE; // empowered on drive
        Step := 120; //
    ELSE
        IF statusword.3 THEN // STATUS error
            Error := TRUE; // Failure
            Controlword.0 := FALSE;
            Controlword.1 := FALSE;
            Controlword.2 := FALSE;
            Controlword.3 := FALSE;
            Controlword.4 := FALSE; // Transition (yx) Xxxx xxxx 0xx1 1111
            Step := 10;
        END_IF;
    END_IF;
```

```
    120: // waiting for Target reached
        IF statusword.10 THEN // Target reached and not statusword.12
            done:= TRUE; // empowered on drive
            busy:= FALSE; // empowered on drive
            Step := 130; //
        ELSE
            IF statusword.3 THEN // STATUS error
                Error := TRUE; // Failure
                Controlword.0 := FALSE;
                Controlword.1 := FALSE;
                Controlword.2 := FALSE;
                Controlword.3 := FALSE;
                Controlword.4 := FALSE; // Transition (yx) Xxxx xxxx 0xx1 1111
                busy:= FALSE; // empowered on drive
                Step := 10;
            END_IF;
        END_IF;

    130: // End
        Step := 130;

END_CASE;
```

11.3 Status of the LEDs

LED display	Icon	Status		Meaning
Logic supply			LED lights up continuously green.	Operating voltage OK
			LED does not light up.	Operating voltage not OK
Status			LED lights up continuously red.	StatusWord Bit 03 (Fault) = 1
				⇨ There is an error.
			LED lights up continuously green.	StatusWord Bit 04 (Voltage enabled) = 1
				⇨ Controller is active and the product can proceed.
			LED lights up continuously blue.	StatusWord Bit 04 (Voltage enabled) = 0
				⇨ Controller is not active and the product cannot proceed.
Power supply			LED lights up continuously green.	Operating voltage OK
			LED flashes orange.	Warning: Operating voltage is too low
			LED lights up continuously orange.	Error: Operating voltage is too low ⇨ The product cannot move.
			LED flashes red.	Warning: Operating voltage is too high
			LED lights up continuously red.	Error: Operating voltage is too high ⇨ The product cannot move.
Clamping element			LED lights up continuously green.	Clamping element opened
			LED does not light up.	Clamping element closed

11.3.1 LED communication

The LED *communication* indicates the bus status in red and the CANopen product status in green.

LED status	Bus status	CANopen product status
LED lights up continuously red.	Bus off	Stopped
LED lights up continuously green.	No error	Operational
LED flashes green.	No error	Pre-operational
LED lights up green 1x.	No error	Stopped
LED lights up green 1x and red 1x.	Warning limit reached	Pre-operational
LED flashes green for 2 s and lights up red 1x.	Warning limit reached	Pre-operational
LED lights up green for 2 s and lights up red 1x.	Warning limit reached	Operational
LED lights up green 1x and flashes red 2x.	Error control event	Pre-operational
LED flashes green for 2 s and flashes red 2x.	Error control event	Pre-operational
LED lights up green for 2 s and flashes red 2x.	Error control event	Operational

11.4 Additional functions

11.4.1 Changing node IDs

The note ID can be changed using the *OBJ_NODE_ID* object (index 0x3000, subindex 0x01).
It can accept any value between 1 and 127.

- ► Write the desired value to the *OBJ_NODE_ID* object.
- ► Write the new value to the non-volatile memory (NVM).
  - ► For more information, refer to section "11.4.4 Saving parameters to NVM".
- ► Perform a power cycle to activate the new value.

11.4.2 Changing baud rates

The baud rate can be changed using the *OBJ_BAUDRATE* object (index 0x3000, subindex 0x02).
The baud rate can accept the following values:

Object	Baud rate [kbps]
0	1000
2	500
3	250
4	125
5	50
6	20
7	10

- ► Write the desired value to the *OBJ_BAUDRATE* object.
- ► Write the new value to the non-volatile memory (NVM).
  - ► For more information, refer to section "11.4.4 Saving parameters to NVM".
- ► Perform a power cycle to activate the new value.

11.4.3 Changing the PDO mapping

RPDO1 is used in the following as an example how to change the PDO mapping.

- ► Set the control unit to the *Pre-operational* status.
- ► Deactivate the PDO mapping by writing a 1 in the valid bit of subindex 0x01 of the communication parameters (0x1400 RPDO1, bit 31 of COB-ID is used).
- ► Remove the mapping by setting subindex 0x00 to 0 (0x1600 RPDO1 mapping parameter).
- ► Modify the mapping by changing the values in the corresponding subindexes (0x1600 RPDO1 mapping parameter).
- ► Activate the mapping by setting subindex 0x00 to the number of the assigned objects (0x1600 RPDO1 mapping parameter).
- ► Define the configuration of the PDO, e.g., transmission type, blocking period, etc.
- ► Activate the PDO mapping by writing a 0 in the valid bit of subindex 0x01 (0x1400 RPDO1, bit 31 of COB-ID is used).
- ► Set the control unit to the *operational* status.

INFORMATION

► See section "15.5 SDO table" for the SDOs that can be mapped.

INFORMATION

The mapping can be saved in NVM with the *OBJ_STORE* object.

► For more information, refer to section "11.4.4 Saving parameters to NVM".

11.4.4 Saving parameters to NVM

Parameters are not saved automatically to NVM.

► If you want to save parameters to NVM, write the *0x65766173* value to the *OBJ_STORE* (Index 0x1010, Subindex 0x01) object.

MSB			LSB
e	v	a	s
0x65	0x76	0x61	0x73

11.4.5 Setting control parameters

The product behavior can be optimized by modifying the control parameters.

The following control parameters can be adjusted.

► For more information, please refer to sections "15.5 SDO table" and "13.1 Control parameters".

- VEL_KP
- VEL_KI
- POS_KP
- VEL_FDB_FIL_1_FREQ
- VEL_KFFA
- POS_KFFV
- POS_KFFA

11.5 Restoring default settings

The default settings can be restored via the *OBJ_RESTORE* object.

The parameters are not updated immediately, but rather are available after a restart.

A value must be written in the corresponding subindex to prevent the default settings from being restored accidentally.

► Write the *0x64616F6C* value to the subindex.

MSB			LSB
d	a	o	l
0x64	0x61	0x6F	0x6C

11.6 Activating clamping elements

WARNING

Risk of injury and material damage in case of non-compliance

If the clamping element is opened, this may induce uncontrolled product movements and cause injuries.

► Never stand within the operational range of the product.

The automatic function of the clamping element can be overridden with the *OBJ_CLAMPING_ELEMENT_OVERRIDE* (Index 0x2129, Subindex 0) object.

Bit	Description
0	Clamping element is controlled by the finite state machine and not overridden.
1	Clamping element is overridden and opened according to the configured mode and parameters.
2	Clamping element is overridden and closed.

12 Error diagnosis

The *OBJ_PRE_DEFINED_ERROR_FIELD* (Index 0x1003) object is part of the emergency object and provides error information.

Subindex 0x00 contains the number of logged errors. The corresponding history can be read from subindex 0x01 to 0x04.

New errors are saved at subindex 0x01 and older errors are shifted to the next higher subindex.

► Refer to section "15.4 Error diagnosis" for the corresponding error description.

13 Parameter settings

The parameter settings for various configurations are listed in the following sections.

These parameter settings can be changed to optimize the behavior of the product for the respective application.

13.1 Control parameters

13.1.1 POS_KP

Proportional Gain for Position Control

This parameter determines how strong the controller reacts to a position error. The higher the value, the faster and more aggressive the system reacts to deviations from the desired position.

- **Low value**: The system reacts slowly and smoothly, but the accuracy of the position may not be sufficient.
- **High value**: The system reacts quickly and precisely, but the risk of overshoots and instability increases.

► For more information, refer to section "15.5 SDO table" under *OBJ_POS_KP (0x2511)*.

13.1.2 VEL_KP

Proportional Gain for Velocity Control

This parameter determines how strong the controller reacts to a velocity error. The higher the value, the faster and more aggressive the system reacts to deviations from the desired velocity.

- **Low value**: The system reacts slowly and smoothly to velocity changes.
- **High value**: The system reacts quickly and precisely, but the risk of overshoots, jerking and instability increases.

► For more information, refer to section "15.5 SDO table" under *OBJ_VEL_KP (0x250A)*.

13.1.3 VEL_KI

Integral Gain for Velocity Control

This parameter corrects systematic errors (continual control deviation) by taking into account the deviation accumulated over time. This parameter helps eliminate remaining control deviations.

- **Low value**: The control deviation is correctly slowly and the system remains stable.
- **High value**: Errors are quickly reduced, but this can lead to overshoots or vibrations.

► For more information, refer to section "15.5 SDO table" under *OBJ_VEL_KI (0x250B)*.

INFORMATION

► The behavior is primarily adjusted with parameters *POS_KP*, *VEL_KP* and *VEL_KI*.

The parameter settings in the following tables act as a guide and are provided for faster commissioning.

The operator is responsible for adjustment to the customer-specific application.

13.1.4 POS_KFFV

Feedforward Velocity Gain for Position Control

This parameter is a feed forward parameter that takes into account the target velocity of the system before an error occurs. This parameter can help improve the reaction time because it does not react to errors, but rather directly takes into account the expected velocity requirement.

- **Application**: Suitable for systems in which fast and precise position changes are important.

► For more information, refer to section "15.5 SDO table" under *OBJ_POS_KFFV (0x2591)*.

13.1.5 POS_KFFA

Feedforward Acceleration Gain for Position Control

This parameter is a feed forward parameter that influences the target velocity of the system. This parameter is particularly useful in improving the dynamic reaction of the system by feeding the desired velocity directly into the control system.

- **Application**: Suitable for high dynamic systems in which fast velocity or deceleration actions are important.

► For more information, refer to section "15.5 SDO table" under *OBJ_POS_KFFA (0x2592)*.

13.1.6 VEL_KFFA

Feedforward Acceleration Gain for Velocity Control

This parameter is a feed forward parameter that influences the velocity control of the system. The target velocity is included directly in the velocity control loop and thus can improve system performance for fast velocity changes.

- **Application**: Suitable for systems in which a fast velocity is required.

► For more information, refer to section "15.5 SDO table" under *OBJ_VEL_KFFA (0x2590)*.

13.1.7 VEL_FBK_FIL_1_FREQ

Frequency for Velocity Feedback Filter

This parameter sets the filter frequency for the feedback of the velocity measurement (low-pass filter). Feedback filtering is used to reduce noise and disruptions that can be caused by external factors or the system itself.

- **Low filter frequency**: Smooths the feedback and reduces the noise. This can lead to a stable control, but may cause a delayed reaction.
- **High filter frequency**: Increases the sensitivity of the feedback, which enables a faster reaction. This can make the system more prone to disruptions.

► For more information, refer to section "15.5 SDO table" under *OBJ_VEL_FBK_FIL_1_FREQ (0x2551)*.

13.2 Default parameters

The following table shows the parameter settings as delivered.

If the product is reset to factory settings, then the parameters assume these values.

13.2.1 ACS40

Name	Description	Value
POS_KP	Proportional factor of the position control loop	0.0015
VEL_KP	Proportional factor of the speed control loop	2
VEL_KI	Integration factor of the speed control loop	80
POS_KFFV	Speed pre-control for the position control loop	0.5
POS_KFFA	Acceleration pre-control for the position control loop	0
VEL_KFFA	Acceleration pre-control for the speed control loop	0002
VEL_FDB_FIL_1_FREQ	Filter frequency for the actual speed value	1000

13.2.2 ACS60

Name	Description	Value
POS_KP	Proportional factor of the position control loop	0001
VEL_KP	Proportional factor of the speed control loop	5
VEL_KI	Integration factor of the speed control loop	50
POS_KFFV	Speed pre-control for the position control loop	0.3
POS_KFFA	Acceleration pre-control for the position control loop	0
VEL_KFFA	Acceleration pre-control for the speed control loop	0.01
VEL_FDB_FIL_1_FREQ	Filter frequency for the actual speed value	800

13.3 Parameter settings for horizontal installation

INFORMATION

The parameter settings in the following tables act as a guide and are provided for faster commissioning. The operator is responsible for adjustment to the customer-specific application.

13.3.1 ACS40

0.0055	Description	Weight [kg]			
		0	1	5	10
POS_KP	Proportional factor of the position control loop	0.0055	0.0055	0002	0.0017
VEL_KP	Proportional factor of the speed control loop	1.8	1.8	4	4.5
VEL_KI	Integration factor of the speed control loop	50	50	80	100
POS_KFFV	Speed pre-control for the position control loop	0	0	0.5	0.8
POS_KFFA	Acceleration pre-control for the position control loop	0	0	0	0
VEL_KFFA	Acceleration pre-control for the speed control loop	0.0025	0.0025	0002	0004
VEL_FDB_FIL_1_FREQ	Filter frequency for the actual speed value	800	800	1000	1000

13.3.2 ACS60

Name	Description	Weight [kg]					
		0	1	5	8	10	15
POS_KP	Proportional factor of the position control loop	0.0012	0.0018	0001	0001	0001	0.0006
VEL_KP	Proportional factor of the speed control loop	15	15	20	20	20	20
VEL_KI	Integration factor of the speed control loop	50	50	50	50	50	50
POS_KFFV	Speed pre-control for the position control loop	0.85	0.85	0.3	0.3	0.3	0.5
POS_KFFA	Acceleration pre-control for the position control loop	0	0	0	0	0	0
VEL_KFFA	Acceleration pre-control for the speed control loop	0.01	0.01	0.01	0.01	0.01	0.01
VEL_FDB_FIL_1_FREQ	Filter frequency for the actual speed value	600	600	800	800	800	800

14 STO diagnostic test

Step	Handling instructions

1	• Switch the product on.
	  • STO1 = 0 V
	  • STO2 = 0 V

2	▶ Set the product to the *Operation Enable* status.
3	▶ Make sure that the power level is not activated either via the software or hardware.

4	▶ Set the following statuses and wait at least 3.4 seconds in this status.
	  • STO1 = 24 V
	  • STO2 = 0 V

5	▶ Set the product to the *Operation Enable* status.
6	▶ Make sure that the power level is not activated via the software.

7	▶ Set the following statuses.
	  • STO1 = 24 V
	  • STO2 = 24 V

8	▶ Set the product to the *Operation Enable* status.
9	▶ Make sure that the power level is not activated via the software.
10	▶ Switch the product off by disconnecting the actuator and sensor voltage and wait at least 10 s in this status.

11	▶ Switch the product on by applying logic and actuator voltage. Set the following statuses and wait at least 3.4 s in this status.
	  • STO1 = 0 V
	  • STO2 = 24 V

12	▶ Set the product to the *Operation Enable* status.
13	▶ Make sure that the power level is not activated via the software.

14	▶ Set the following statuses.
	  • STO1 = 24 V
	  • STO2 = 24 V

15	▶ Set the product to the *Operation Enable* status.
16	▶ Make sure that the power level is not activated via the software.
17	▶ Switch the product off by disconnecting the actuator and sensor voltage and wait at least 10 s in this status.

18	▶ Switch the product on by applying logic and actuator voltage. Set the following statuses.
	  • STO1 = 24 V
	  • STO2 = 24 V

19	▶ Set the product to the *Operation Enable* status.
20	▶ Make sure that the power level can be activated and the motor can rotate.

15 Appendix

15.1 Finite state machine CiA 402

A finite state machine must be run through to make the control system operational. This is defined in CiA 402.

Status changes are requested in object 0x6040 (ControlWord). The actual status of the finite state machine can be taken from object 0x6041 (StatusWord).

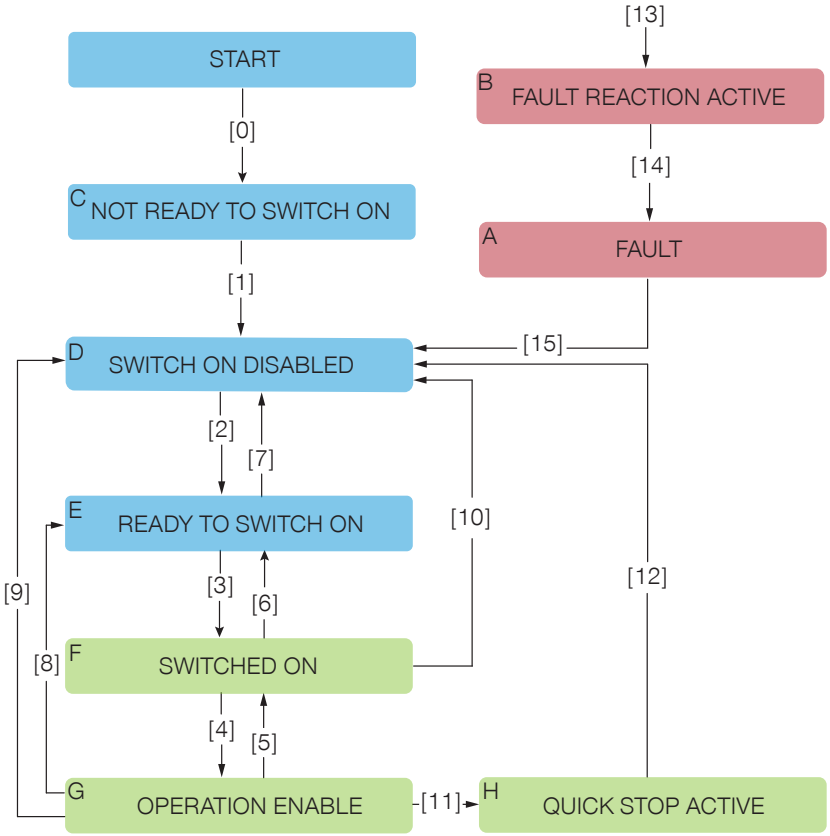

15.1.1 ControlWord

Transition	Command	Bit in the ControlWord					
-	-	2^7	2^3	2^2	2^1	2^0	-
-	-	Fault reset	Enable operation	Quick stop	Enable voltage	Switch on	Typical value
[6]	Shutdown	0	X	1	1	0	6
[3]	Switch on	0	0	1	1	1	7
[4]	Switch on + Enable operation	0	1	1	1	1	15
[7]	Disable voltage	0	X	X	0	X	0
[7]	Quick stop	0	X	0	1	X	2 or 11
[5]	Disable operation	0	0	1	1	1	7
[4]	Enable operation	0	1	1	1	1	15
[15]	Fault reset	0 to 1 (rising edge)	-	-	-	-	128

INFORMATION

Bits that are marked with a X are not relevant.

The control system supports the following events and actions.

Transition	Event	Function
[0]	Automatic transition after switch on or product reset.	The internal initialization sequence runs.
[1]	Automatic transition when the internal initialization sequence is completed.	Communication is possible.
[2]	The *Shutdown* command is received.	-
[3]	The *Shutdown* command is received.	The voltage supply is switched on.
[4]	The *Enable operation* command is received.	The drive function is activated.
[5]	The *Disable operation* command is received.	The drive function is deactivated.
[6]	The *Shutdown* command is received.	The voltage supply is switched off.
[7]	The *Disable voltage* or *Quick stop* commands are received.	-
[8]	The *Shutdown* command is received.	The drive function is deactivated and the voltage supply is switched off.
[9]	The *Disable voltage* command is received.	The drive function is deactivated and the voltage supply is switched off.
[10]	The *Disable voltage* or Quick stop commands are received.	The voltage supply is switched off.
[11]	The *Quick stop* command is received.	The *Quick stop* command is started.
[12]	Automatic transition when the *Quick stop* command is completed or the *Disable voltage* command was received by the control system (depending on ...)	The drive function is deactivated and the voltage supply is switched off.
[13]	The *Fault* command is received.	The configured error response is executed.
[14]	Automatic transition	The drive function is deactivated and the voltage supply is switched off.
[15]	The *Fault reset* command is received.	The status is reset if no drive error exists. After exiting the error status, the *Fault reset* command in ControlWord is deleted from the control unit.

Index	Subindex	Data type	Access	NVM	Value range	Default value	Unit
0x6040	0x00	UINT16	RW	No	UINT16	-	-

Bit	Name	Description
15 to 09	Reserved	0
08	Halt	1: In the *Operation enable* status, the active movement is braked to velocity 0 as long as the *Halt* bit is not set to *do nothing*. New absolute setpoints that are made during the activation of this bit are taken into account after this bit is set to 0 provided no status change has occurred. 0: The motor can operate normally. If the *Halt* bit is set to 0 after it was set to 1, a new setpoint storage may be required.
07	Fault reset	0 to 1 (rising edge) – error acknowledgment (see section "15.1 Finite state machine CiA 402"
06	Abs/rel	Status *Profile position* 0: Target position is an absolute value. 1: Target position is a relative value.
05	Change immediately	Immediate change = 0 Keep setpoint = 0 to 1: The positioning is completed (*Target reached*) before the next one starts (*Set of set-points mode*). Immediate change = 1 Keep setpoint = 0 to 1: The next positioning should be started immediately while the current positioning is interrupted.
04	Latch setpoint	
03	Quick stop	0 = switches to the status *Quick stop*.
02	Enable operation	1 = switches to the status *Enabled operation*.
01	Enable voltage	1 = switches to the status *Enabled voltage*.
00	Switch on	1 = switches to the status *Switched on*.

INFORMATION

The various statuses and transitions are described in the CiA 402 finite state machine.

► For more information, refer to section "15.1 Finite state machine CiA 402".

15.1.2 StatusWord

The StatusWord is used for the following functions:

- Determining the status of CANopen products.

The StatusWord is accessible via SDO with index 0x6041 - subindex 0x00 (data type U16).

Index	Subindex	Data type	Access	NVM	Value range	Default value	Unit
0x6041	0x00	UINT16	RO	No	UINT16	-	-

Bit	Description
15	Reserved
14	Initial angle determination process finished
13	Following error
12	Setpoint ack
11	Internal limit active
10	Target reached
09	Reserved
08	Reserved
07	Warning
06	Switch on disabled
05	Quick stop
04	Voltage enabled
03	Fault
02	Operation enabled
01	Switched on
00	Ready to switch on

Bit patterns 2^{15} to 2^{0}	Status
xxxx xxxx x0xx 0000	Not ready to switch on
xxxx xxxx x1xx 0000	Switch on disabled
xxxx xxxx x01x 0001	Ready to switch on
xxxx xxxx x01x 0011	Switched on
xxxx xxxx x01x 0111	Operation enabled
xxxx xxxx x00x 0111	Quick stop active
xxxx xxxx x0xx 1111	Fault reaction active
xxxx xxxx x0xx 1000	Fault

15.1.2.1 Status-specific bits

The StatusWord contains two status-specific bits (12 and 13) whose meaning changes depending on the current status.
In profile position:

INFORMATION

The *Target Reached* bit requires a configured position window and a configured time to enable the use of this function.

Bit	Description	Values and meaning
13	Following error	0: No following error 1: Target position reached
12	Setpoint ack	0: The trajectory generator has not applied the position values. 1: The trajectory generator has applied the position values.
10	Target reached	0: Target position not reached 1: Target position reached

15.2 CANopen network management (NMT)

NMT protocols provide services for network initialization, error control and device status control. NMT objects are used for executing NMT services. NMT follows a master-slave structure and therefore requires a CANopen device to fulfill the function of the NMT master. All other CANopen devices are regarded as NMT slaves. An NMT slave is uniquely identified in the network by its node ID, a value in the range of 1 to 127.

15.3 NMT finite state machine

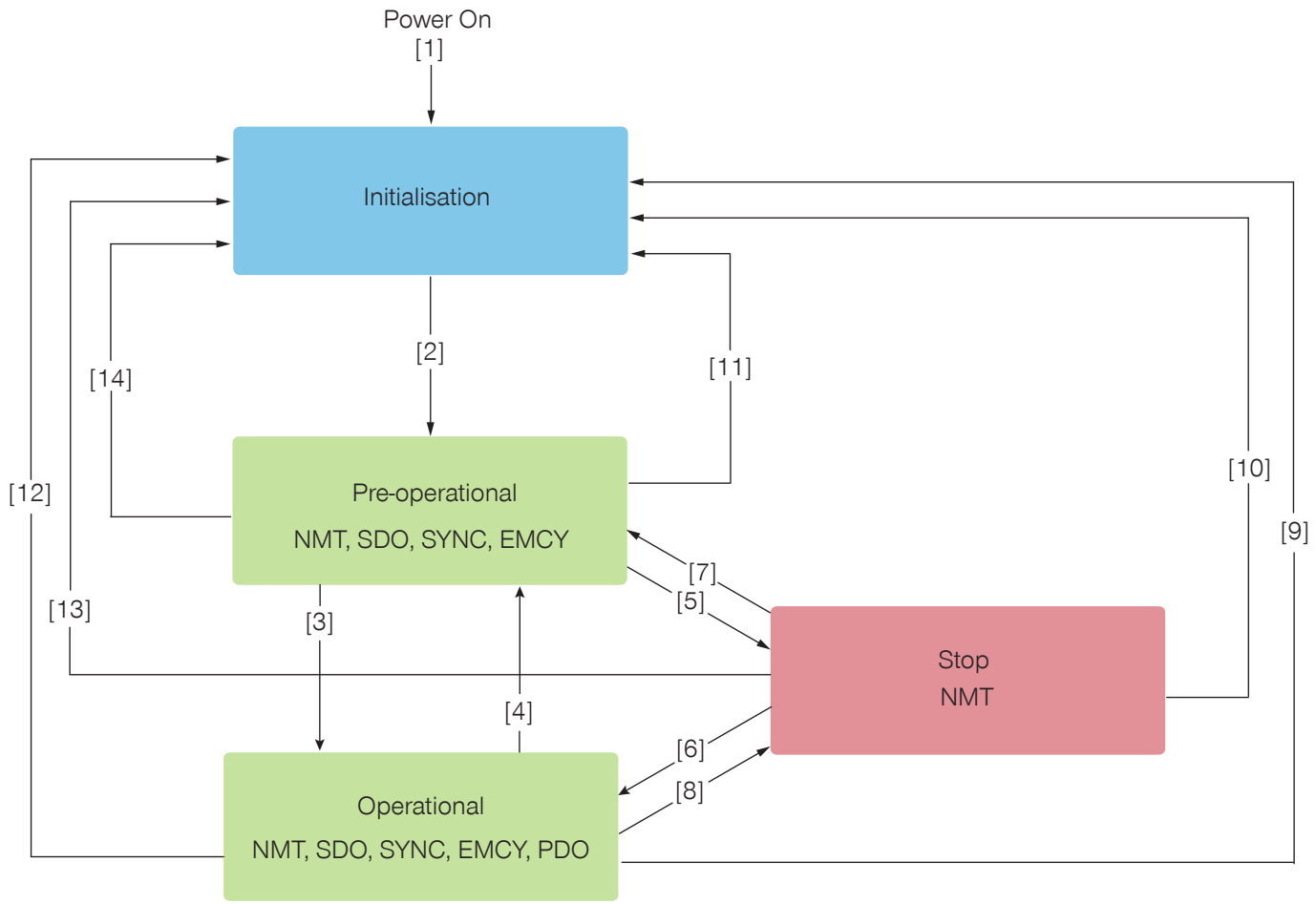

Transition	Event
[1]	After switch-on, the product is set directly to the initialization status.
[2]	As soon as initialization is complete, the product is set to the *Pre-operational* status.
[4], [7]	The command to go to the *Pre-operational* status is received.
[12], [13], [14]	The *Reset* command is received.
[9], [10], [11]	The *Reset* node command is received.
[3], [6]	The *Start remote node* command is received.
[5], [8]	The *Stop remote node* command is received.

	Pre-operational	Operational	Stopped
NMT services	X	X	X
NMT error control	X	X	X
PDO		X	
SDO	X	X	
Sync object	X	X	
Emergency object	X	X	

15.4 Error diagnosis

Error ID	Default severity and reaction	Reaction configurable	Meaning	Description
0x0000	None	No	No error	Drive is working correctly
0x1001	Fault - Power stage shutdown	Yes	Error in the watchdog	No valid frames have been received during the configured communications watchdog window time
0x2280	Fault - Power stage shutdown	No	Overcurrent detected (internal drive limit)	It indicates that a current value higher than the maximum absolute one allowed by the drive has been detected. There are several sources that produce this error:
				Short-circuit (See product manual for further information about detectable short-circuits)
				Control loops instabilities, over-shoots
0x2281	Fault - Power stage shutdown	Yes	Defective gate driver	A failure has been detected in gate driver. The cause of the failure could be
				Mismatch of gate driver configuration and expected configuration
				Hardware failure signal
0x2288	Fault - Power stage shutdown	No	User I2T limit detected without current control	The I2T algorithm is always enabled and generates a fault if the current loop is disabled when the user I2T limit is overcome
0x2289	Fault - Power stage shutdown	Yes	Over-current detected (user limit) without current control	Indicates that a current reading higher than the configured max. current has been reached
0x228A	Fault - Power stage shutdown	No	System I2T detected	The system I2T limit is reached (maximum drive limits)
0x228B	Fault - Power stage shutdown	No	Derating without current control	Indicates that driver has started derating ramp without current control
0x2301	Fault - Power stage shutdown	No	Clamping element over-current	The current in the clamping element is higher than the limit set by the user
0x2302	Fault - Power stage shutdown	No	Clamping element tracking error	The clamping element current cannot follow the value set by the user
0x3210	Fault - Power stage shutdown	No	Over-voltage detected (internal drive limit)	Maximum allowed voltage by the drive is overcome
0x3211	Fault - Power stage shutdown	No	Over-voltage detected (redundant internal drive limit)	Maximum allowed voltage by the drive is overcome
0x3221	Fault - Power stage shutdown	No	Under-voltage detected (internal drive limit)	Minimum allowed voltage by the drive is overcome
0x3231	Fault - Power stage shutdown	Yes	Over-voltage detected (user limit)	User maximum voltage limit is overcome
0x3241	Fault - Power stage shutdown	Yes	Under-voltage detected (user limit)	User minimum voltage limit is overcome
0x3280	Fault - Power stage shutdown	Yes	STO is enabled	STO is active and could have disabled the power stage disabled

Error ID	Default severity and reaction	Reaction configurable	Meaning	Description
0x3281	Fault - Power stage shutdown	No	STO supply fault	STO supply fault. Unit could be damaged
0x3282	Critical - Power stage shutdown	No	STO abnormal fault	STO abnormal fault. STO1 and STO2 inputs differed more than latching time
0x3283	Fault - Power stage shutdown	No	STO active in operation enabled	STO is active in operation enabled and has disabled the power stage
0x3290	Fault - Power stage shutdown	No	Input stage problem	It indicates that the bus voltage is not being loaded correctly
0x4300	Fault - Power stage shutdown	No	Over-Temperature detected (internal drive limit)	Maximum allowed drive temperature is overcome
0x4301	Fault - Power stage shutdown	No	Under-Tem-perature detected (internal drive limit)	Minimum allowed drive temperature is overcome
0x4303	Fault - Power stage shutdown	Yes	Over-temperature detected (user limit)	User maximum drive temperature is overcome
0x4304	Fault - Power stage shutdown	Yes	Under-temperature detected (user limit)	User minimum drive temperature is overcome
0x4400	Fault - Power stage shutdown	Yes	Motor Over Temperature detected	Maximum temperature allowed by the actuator is overcome
0x7385	Fault - Power stage shutdown	Yes	Position out of limits out of position modes	Indicates that position readings are out of the configured software limits when the position loop is not enabled
0x7386	Fault - Power stage shutdown	Yes	Velocity out of limits out of velocity or position modes	It indicates that velocity readings are higher than the configured max. velocity when the velocity loop is not enabled
0x7387	Fault - Power stage shutdown	Yes	In a position mode, following error overcomes the position following error window	The position demand can't be followed properly by the drive. Review controller, limits, and acceleration/velocities
0x7388	Fault - Power stage shutdown	Yes	In a velocity mode, following error overcomes the velocity following error window	The velocity demand can't be followed properly by the drive. Review controller, limits, and acceleration/velocities
0x738C	Fault - Power stage shutdown	No	Position out of limits in position mode	The drive is outside its position limits when being enabled in position mode
0x7391	Fault - Power stage shutdown	No	Profiler parameters not valid. They should all have positive values.	Profiler parameters such as max. velocity, max. acceleration or max. deceleration has unsupported values that can cause undesired trajectories

15.5 SDO table

Name	Index	Subindex	Data type	Access	PDO Mappable	NVM
OBJ_PRE_DEFINED_ ERROR_FIELD	This object provides the errors that occurred on the drive and were signaled via the emergency object. In doing so it provides an error history list. Subindex 0x00 contains the number of actual errors that are recorded in the array starting at subindex 0x01. Every new error will be stored at subindex 0x01 and older errors will be moved to the next higher subindex.					
	0x1003	0x00	UINT8	R	No	No
	Standard error field 1					
	0x1003	0x01	UINT32	R	No	No
	Standard error field 2					
	0x1003	0x02	UINT32	R	No	No
	Standard error field 3					
	0x1003	0x03	UINT32	R	No	No
	Standard error field 4					
	0x1003	0x04	UINT32	R	No	No
OBJ_STORE	This object controls the saving of parameters into the non-volatile memory. In order to avoid storage of parameters by mistake, storage is only executed when a specific signature is written to the appropriate subindex. The signature that must be written is *save* or *0x65766173*.					
	MSB			**LSB**		
	e	v	a	s		
	0x65	0x76	0x61	0x73		
	0x1010	0x01	UINT32	RW	No	No
OBJ_RESTORE	This object restores the default values of parameters. Restoring is done by declaring the stored parameters in NVM as invalid. The function does not load the default parameters immediately. New values will be available only at next Power On. In order to avoid the restoring of default parameters by mistake, restoring is only executed when a specific signature is written to the appropriate subindex. The signature that must be written is *load* or *0x64616F6C*.					
	MSB			**LSB**		
	d	a	o	l		
	0x64	0x61	0x6F	0x6C		
	0x1011	0x01	UINT32	RW	No	No
OBJ_CONSUMER_ HEARTBEAT_TIME	This object indicates the expected heartbeat cycle times. 0 value disables the heartbeat consumer mechanism.					
	Bit number	**Status**				
	32 - 24	Reserved				
	23 - 16	Producer Node-ID				
	15 - 0	Heartbeat time [ms]				
	0x1016	0x01	UINT32	RW	No	No
OBJ_PRODUCER_ HEARTBEAT_TIME	This object contains the producer heartbeat time [ms]. The producer heartbeat indicates the configured cycle time of the heartbeat. A value of 0 disables the heartbeat.					
	0x1017	0x00	UINT16	RW	No	No

Name	Index	Subindex	Data type	Access	PDO Mappable	NVM
OBJ_IDENTITY_OBJECT	This object contains the VendorID.					
	0x1018	0x01	UINT32	R	No	No
	This object contains the product code.					
	0x1018	0x02	UINT32	R	No	No
	This object contains firmware revision.					
	0x1018	0x03	UINT32	R	No	No
	This object contains serial number.					
	0x1018	0x04	UINT32	R	No	No
OBJ_BUS_VOLTAGE_VALUE	This object shows the instant power voltage value.					
	0x2060	0x00	FLOAT	R	Yes	No
OBJ_POWER_STAGE_MAX_ACTUAL_TEMPERATURE	This object shows the maximum instant temperature value of drive power stage temperature.					
	0x2067	0x00	FLOAT	R	Yes	No
OBJ_CLAMPING_ELEMENT_OVERRIDE	This object allows to override the automatic functionality of the clamping element. **WARNING** When changed in *operation enable* state, the behaviour of the drive is unexpected. ► Disable the power stage before modifying the parameter.					
	Value	**Meaning**				
	0	No override. The clamping element is controlled by state machine.				
	1	Overrides and releases the clamping element according to the configured mode and parameters.				
	2	Overrides and locks the clamping element.				
	0x2129	0x00	UINT16	RW	No	No
OBJ_POSITION_WINDOW	This object sets the window [µm] around position set-point inside which target can be considered reached. The target reached bit in the status word object will be set whenever the position error is contained within the range defined in OBJ_POSITION_WINDOW for longer than the amount of time defined in OBJ_POSITION_WINDOW_TIME.					
	0x21F1	0x00	UINT32	RW	No	Yes
OBJ_POSITION_WINDOW_TIME	This object sets the time [ms] that the error between position set-point and actual position has to be smaller than OBJ_POSITION_WINDOW before detecting a target reached. The target reached bit in the status word object will be set whenever the position error is contained within the range defined in OBJ_POSITION_WINDOW for longer than the amount of time defined in POSITION_WINDOW_TIME.					
	0x21F2	0x00	UINT32	RW	No	Yes
OBJ_VEL_KP	This object contains the Velocity loop Kp - parameter allows configuring the Kp of the PID controller used for velocity regulation.					
	0x250A	0x00	FLOAT	RW	No	Yes
OBJ_VEL_KI	This object contains the Velocity loop Ki - parameter allows configuring the Ki of the PID controller used for velocity regulation					
	0x250B	0x00	FLOAT	RW	No	Yes
OBJ_VEL_KD	This object contains the Velocity loop Kd - parameter allows configuring the Kd of the PID controller used for velocity regulation					
	0x250C	0x00	FLOAT	RW	No	Yes
OBJ_POS_KP	This object contains the Position loop Kp - parameter allows configuring the Kp of the PID controller used for position regulation.					
	0x2511	0x00	FLOAT	RW	No	Yes

Name	Index	Subindex	Data type	Access	PDO Mappable	NVM
OBJ_POS_KI	This object contains the Position loop Ki - parameter allows configuring the Ki of the PID controller used for position regulation.					
	0x2512	0x00	FLOAT	RW	No	Yes
OBJ_POS_KD	This object contains the Position loop Kd - parameter allows configuring the Kd of the PID controller used for position regulation.					
	0x2513	0x00	FLOAT	RW	No	Yes
OBJ_STO_STATUS	This object shows the status of the STO module.					
	0x251A	0x00	UINT16	R	Yes	No
OBJ_VEL_FDB_FIL_1_FREQ	This object contains the Velocity feedback filter 1 frequency [Hz] register that contains the cutoff frequency of the low pass filter for the velocity feedback filter 1.					
	0x2551	0x00	UINT32	RW	No	Yes
OBJ_VEL_KFFA	This object contains the Velocity loop Kffa - parameter allows configuring the Kffa (feed-forward velocity constant) of the PID controller used for velocity regulation.					
	0x2590	0x00	FLOAT	RW	No	Yes
OBJ_POS_KFFV	This object contains the Position loop Kffv - parameter allows configuring the Kffv (feed-forward velocity constant) of the PID controller used for position regulation.					
	0x2591	0x00	FLOAT	RW	No	Yes
OBJ_POS_KFFA	This object contains the Position loop Kffa - parameter allows configuring the Kffa (feed-forward acceleration constant) of the PID controller used for position regulation.					
	0x2592	0x00	FLOAT	RW	No	Yes
OBJ_NODE_ID	This object contains the node-ID of the controller.					
	0x3000	0x01	UINT16	RW	No	Yes

Bit number	Status
5 - 15	Reserved
4	STO report This input notifies the state of the STO module circuit output. It is set to 1 when both STO1 and STO2 are at high level, and 0 in any other case.
3	STO abnormal fault Normally low. This input is set to high level whenever the STO module circuit detects that STO1 and STO2 input values differ. When this situation stays for some seconds, this bit will remain active until a power-cycle is applied.
2	STO supply fault Normally high. If this input is set to low level it means a supply failure has happend in the STO module circuit.
1	STO2 Status of the STO module input 2.
0	STO1 Status of the STO module input 1.

Name	Index	Subindex	Data type	Access	PDO Mappable	NVM
OBJ_BAUDRATE	This object contains the baud rate of the CANopen bus.					
	0x3000	0x02	UINT16	RW	No	Yes
OBJ_LIM_POSITION_MIN	This object contains the minimum position limit [µm].					
	0x3007	0x01	INT32	R	No	Yes
OBJ_LIM_POSITION_MAX	This object contains the maximum position limit [µm].					
	0x3007	0x02	INT32	R	No	Yes
OBJ_LIM_VELOCITY_MIN	This object contains the minimum velocity limit [mm/s].					
	0x3008	0x01	UINT32	R	No	Yes
OBJ_LIM_VELOCITY_MAX	This object contains the maximum velocity limit [mm/s].					
	0x3008	0x02	UINT32	R	No	Yes
OBJ_LIM_ACCELERATION_MIN	This object contains the minimum acceleration limit [mm/s^2].					
	0x3009	0x01	UINT32	R	No	Yes
OBJ_LIM_ACCELERATION_MAX	This object contains the maximum acceleration limit [mm/s^2].					
	0x3009	0x02	UINT32	R	No	Yes
OBJ_LIM_DECELERATION_MIN	This object contains the minimum deceleration limit [mm/s^2].					
	0x300A	0x01	UINT32	R	No	Yes
OBJ_LIM_DECELERATION_MAX	This object contains the maximum deceleration limit [mm/s^2].					
	0x300A	0x02	UINT32	R	No	Yes
OBJ_LIM_POS_DEFAULT	This object contains the default Position loop Kp.					
	0x300C	0x01	FLOAT	R	No	Yes
OBJ_LIM_POS_KP_MIN	This object contains the minimum Position loop Kp limit.					
	0x300C	0x02	FLOAT	R	No	Yes
OBJ_LIM_POS_KP_MAX	This objeact contains the maximum Position loop Kp limit.					
	0x300C	0x03	FLOAT	R	No	Yes
OBJ_LIM_VEL_KP_DEFAULT	This object contains the default Velocity loop Kp.					
	0x300D	0x01	FLOAT	R	No	Yes
OBJ_LIM_VEL_KP_MIN	This object contains the minimum Velocity loop Kp limit.					
	0x300D	0x02	FLOAT	R	No	Yes
OBJ_LIM_VEL_KP_MAX	This object contains the maximum Velocity loop Kp limit.					
	0x300D	0x03	FLOAT	R	No	Yes
OBJ_LIM_VEL_KI_DEFAULT	This object contains the default Velocity loop Ki.					
	0x300E	0x01	FLOAT	R	No	Yes
OBJ_LIM_VEL_KI_MIN	This object contains the minimum Velocity loop Ki limit.					
	0x300E	0x02	FLOAT	R	No	Yes
OBJ_LIM_VEL_KI_MAX	This object contains the maximum Velocity loop Ki limit.					
	0x300E	0x03	FLOAT	R	No	Yes
OBJ_LIM_POS_KFFV_DEFAULT	This object contains the default Position loop Kffv.					
	0x300F	0x01	FLOAT	R	No	Yes

Table index	Baud rate
0	1 Mbps
2	500 Kbps
3	250 Kbps
4	125 Kbps
5	50 Kbps
6	20 Kbps
7	10 Kbps

Name	Index	Subindex	Data type	Access	PDO Mappable	NVM
OBJ_LIM_POS_KFFV_MIN	This object contains the minimum Position loop Kffv limit.					
	0x300F	0x02	FLOAT	R	No	Yes
OBJ_LIM_POS_KFFV_MAX	This object contains the maximum Position loop Kffv limit.					
	0x300F	0x03	FLOAT	R	No	Yes
OBJ_LIM_POS_KFFA_ DEFAULT	This object contains the default Position loop Kffa.					
	0x3010	0x01	FLOAT	R	No	Yes
OBJ_LIM_POS_KFFA_MIN	This object contains the minimum Position loop Kffa limit.					
	0x3010	0x02	FLOAT	R	No	Yes
OBJ_LIM_POS_KFFA_MAX	This object contains the maximum Position loop Kffa limit.					
	0x3010	0x03	FLOAT	R	No	Yes
OBJ_LIM_VEL_KFFA_ DEFAULT	This object contains the default Velocity loop Kffa.					
	0x3011	0x01	FLOAT	R	No	Yes
OBJ_LIM_VEL_KFFA_MIN	This object contains the minimum Velocity loop Kffa limit.					
	0x3011	0x02	FLOAT	R	No	Yes
OBJ_LIM_VEL_KFFA_MAX	This object contains the maximum Velocity loop Kffa limit.					
	0x3011	0x03	FLOAT	R	No	Yes
OBJ_LIM_VEL_FBK_FIL_1_ FREQ_DEFAULT	This object contains the default Velocity feedback filter 1 frequency [Hz].					
	0x3012	0x01	UINT32	R	No	Yes
OBJ_LIM_VEL_FBK_FIL_1_ FREQ_MIN	This object contains the minimum Velocity feedback filter 1 frequency [Hz].					
	0x3012	0x02	UINT32	R	No	Yes
OBJ_LIM_VEL_FBK_FIL_1_ FREQ_MAX	This object contains the maximum Velocity feedback filter 1 frequency [Hz].					
	0x3012	0x03	UINT32	R	No	Yes
OBJ_PARAMETER_SET_ VERSION	This object contains the parameter set version.					
	0x3015	0x00	STRING	R	No	Yes
OBJ_PARAMETER_SET_ID	This object contains the parameter set id.					
	0x3016	0x00	STRING	R	No	Yes
OBJ_ERROR_CODE	This object contains the last detected error.					
	0x603F	0x00	UINT16	R	Yes	No
OBJ_CONTROL_WORD	This object contains the „ControlWord“. The ControlWord allows to operate the device state machine and functions.					
	0x6040	0x00	UINT16	RW	Yes	No
OBJ_STATUS_WORD	This object contains the „StatusWord“. The StatusWord shows the current device and operaion status.					
	0x6041	0x00	UINT16	R	Yes	No
OBJ_QUICK_STOP_OPTION_ CODE	This object indicates what action is performed when the quick stop function is executed.					
	0x605A	0x00	INT16	RW	No	Yes

Value	Quick stop option
0	Disable power stage
1	Slow down ramp and disable
2	Quick stop ramp and disable
5	Slow down ramp
6	Quick stop ramp

Slow down ramp uses deceleration defined in PROFILE_DECELERATION, while Quick stop ramp uses LIM_DECELERATION_MAX.

Name	Index	Subindex	Data type	Access	PDO Mappable	NVM
OBJ_HALT_OPTION_CODE	This object indicates the reaction of the halt when it is triggered. Slow down ramp uses deceleration defined in PROFILE_DECELERATION, while Quick stop ramp uses LIM_DECELERATION_MAX. This parameter cannot be changed while the power stage is enabled.					
	0x605D	0x00	INT16	RW	No	Yes
OBJ_OPERATION_MODE	This object modifies the current operation mode. The default value is 1.					
	0x6060	0x00	INT8	RW	Yes	Yes
OBJ_OPERATION_MODE_DISPLAY	This object provides the actual operation mode.					
	0x6061	0x00	INT8	R	Yes	No
OBJ_ACTUAL_POSITION	This object contains the actual position calculated using the position feedback.					
	0x6064	0x00	INT32	R	Yes	No
OBJ_POS_FOLLOWING_ERROR_WINDOW	This object defines the tolerated position values [µm] symmetrically to the position demand value. If the position actual value is out of the POSITION_FOLLOWING_ERROR_WINDOW for a longer time as defined in POSITION_FOLLOWING_ERROR_TIMEOUT, a position following error occurs. When the error condition is detected, the following error bit (bit number 13) of the StatusWord will be set. A following error may occur when a drive is blocked, when an unreachable profile velocity occurs, or when using wrong closed-loop coefficients.					
	0x6065	0x00	UINT32	RW	No	Yes
OBJ_POS_FOLLOWING_ERROR_TIMEOUT	This object defines the time [ms] during which a deviation from the current position can deviate from the position demand value. If the position actual value is out of the POSITION_FOLLOWING_ERROR_WINDOW for a longer time as defined in POSITION_FOLLOWING_ERROR_TIMEOUT, a position following error occur. When the error condition is detected, the following error bit (bit number 13) of the status word will be set.					
	0x6066	0x00	UINT16	RW	No	Yes
OBJ_ACTUAL_VELOCITY	This object contains the actual velocity [mm/s] calculated using the velocity feedback.					
	0x606C	0x00	INT32	R	Yes	No
OBJ_TORQUE_ACTUAL_VALUE	This object provides the actual torque value [‰ rated torque] of the motor. It corresponds to the instantaneous torque in the motor. The rated torque of ACS40 is 120 mNm The rated torque of ACS60 is 560 mNm					
	0x6077	0x00	INT16	R	Yes	No
OBJ_CURRENT_ACTUAL_VALUE	This object provides the actual current value [‰ rated current] of the motor. It corresponds to the instantaneous current in the motor. The rated current of ACS40 is 4.37 A. The rated current of ACS60 is 10.0 A.					
	0x6078	0x00	INT16	R	Yes	No

Value	Action
0	Reserved
1	Slow down ramp
2	Quick stop ramp

Value	Mode of operation
8	Cyclic sync position mode

Value	Mode of operation
8	Cyclic sync position mode

Name	Index	Subindex	Data type	Access	PDO Mappable	NVM
OBJ_POSITION_SET_POINT	This object is used to command the target values [µm] for position input. The movement is performed using current movement parameters (velocity, acceleration, deceleration, etc.). The target position will be interpreted as absolute or relative, depending on the control-word's abs/rel flag.					
	0x607A	0x00	INT32	RW	Yes	No
OBJ_PROFILE_VELOCITY	This object indicates the configured velocity [mm/s] normally attained at the end of the acceleration ramp. It is valid for both directions of motion. The velocity is restricted by OBJ_LIM_VELOCITY_MAX and OBJ_LIM_VELOCITY_MIN.					
	0x6081	0x00	UINT32	RW	Yes	Yes
OBJ_PROFILE_ ACCELERATION	This object indicates the configured acceleration [mm/s²] used by the profiler. The acceleration is restricted by OBJ_LIM_ACCELERATION_MAX and OBJ_LIM_ ACCELERATION_MIN.					
	0x6083	0x00	UINT32	RW	Yes	Yes
OBJ_PROFILE_ DECELERATION	This object indicates the configured deceleration [mm/s²] used by the profiler. The deceleration is restricted by OBJ_LIM_DECELERATION_MAX and OBJ_LIM_ DECELERATION_MIN.					
	0x6084	0x00	UINT32	RW	Yes	Yes
OBJ_INTERPOLATION_ TIME_MANTISSA	This object sets the interpolation time period between setpoint values. Interpolation time will be given by: INTERPOLATION_TIME_MANTISSA·10^(INTERPOLATION_TIME_EXPONENT) s Example: 5· 10^(-3) s = 5 ms					
	0x60C2	0x01	UINT8	RW	No	No
OBJ_INTERPOLATION_ TIME_EXPONENT	This object sets the interpolation time period between setpoint values. Interpolation time will be given by: INTERPOLATION_TIME_MANTISSA · 10^(INTERPOLATION_TIME_EXPONENT) s Example: 5 · 10^(-3) s = 5 ms					
	0x60C2	0x02	INT8	RW	No	No
OBJ_POSITION_ FOLLOWING_ERROR	This object provides the actual value [µm] of the following error, which is the difference between the position demand and actual position (error = demand - actual).					
	0x60F4	0x00	INT32	R	Yes	No

16 Maintenance

NOTICE

Material damage resulting from blowing out with compressed air

Blowing out the product with compressed air can cause malfunctions and pose a risk of accidents.

- ► Never purge the product with compressed air.

NOTICE

Material damage caused by liquid and solvent-based cleaning agents

Liquid and solvent-based cleaning agents can cause malfunctions and pose a risk of accidents.

- ► Do not clean the product with any cleaning agents that are liquid or contain solvents.

NOTICE

Material damage due to leaking lubricant

Excessive lubrication can cause moving machine parts to leak lubricant. This can cause soiling of the machine, the workpiece and the environment.

- ► Only use approved or recommended lubricants.
- ► Observe the manufacturer information for use of specific lubricants.
- ► Adhere to the lubrication interval.
- ► Avoid excessive lubrication.
- ► Remove leaking lubricant immediately and thoroughly.

16.1 Safe Torque Off (STO)

16.1.1 Safety specifications

ACS40

Specification of the safety function	Values
Standards	EN 61800-5-2:2017 EN 61508:2010 EN ISO 13849-1:2015
Safety-relevant parameters in accordance with IEC 61508:2010	SIL2 PFH: 4.1 x 10-7 1/h SFF: > 99% (High)
Safety-relevant parameters in accordance with EN ISO 13549-1:2015	PLd Category 3 DC: 99% (High) MTTFd: ≥ 100 years (High)

ACS60

Specification of the safety function	Values
Standards	EN 61800-5-2:2017 EN 61508:2010 EN ISO 13849-1:2015
Safety-relevant parameters in accordance with IEC 61508:2010	SIL2 PFH: 4.2 x 10-7 1/h SFF: > 99% (High)
Safety-relevant parameters in accordance with EN ISO 13549-1:2015	PLd Category 3 DC: 99% (High) MTTFd: ≥ 100 years (High)

16.1.2 STO diagnostic test

- ► Check the function of the STO connection at least once within three months.
- ► Note that it is the operator's responsibility to prevent hazards that may result from motor movement.
- ► Information on a specific product variant can be found in the respective commissioning instructions on our website.

16.1.3 STO operating statuses

Mode	State	Status/Level STO1		Status/Level STO2		Status of the power level	STO message bit	STO error bit
Operating status	STO activated (no torque available)	0	< 10 V	0	< 10 V	Off	0	0
		Description						
		The system logic is supplied with power, but the STO function is activated. ⇨ No torque can be applied to the motor. STO deactivation is reported to the control system and to the safety circuit. This is provided to ensure safe torque deactivation in two-channel operation.						
	STO deactivated (torque available)	1	> 14 V	1	> 14 V	Can be activated	1	0
		Description						
		The STO function is deactivated and the motor can be supplied with torque. The motor can run under firmware control. This is the normal operating status.						
Error status	STO malfunction	0	< 10 V	1	> 14 V	Off	0	1
		1	> 14 V	0	< 10 V	Off	0	1
		Description						
		If a problem is detected with the two-channel STO function, an error status can be reported. This may be the case if the status varies over a longer period of time. In this status, application of torque to the motor is prevented. If this status remains unchanged for > 3.4 s, the STO is locked in the FAULT status. A restart is needed to reset this error.						
	Locked error status	x	-	x	-	Off	NOR (STO1, STO2)	1
		Description						
		After > 3.4 s of irregular STO activity, the driver remains in this status until the next power supply cycle.						
	Supply error	x	x	x	x	Off	x	x
		Description						
		If voltage outside the limit values is detected in the internal logic voltages, the system is set to a safe status. The system can only revert to a different status once safe logic voltages have been restored.						

INFORMATION

The STO1 and STO2 signals must change with a maximum time deviation of 3.4 s. Larger time deviations trigger an error.

Between 10 V and 14 V, the logic level of the STO signals is considered undefined. If an undefined level is present, STO1 and STO2 can assume different logic levels and thus trigger an interlocked error status.

16.2 Relubricating the product

NOTICE

Material damage due to insufficient lubrication

- ► Make sure that the product is extended or moving during lubrication.
- ► Move the product over the entire stroke regularly to ensure even lubrication.

INFORMATION

The specified values are recommendations.

In case of harsh operating conditions, such as contamination, vibrations, impact loads or similar conditions, shortened relubrication intervals are recommended.

If the service life is still not reached after 2 years, lubrication is recommended due to grease aging.

Recommended lubricants:

- THK AFB-LF
- Klüber ISOFLEX NCA 15
- Lubcon Turmogrease Highspeed L 252

Ball screw		
Interval in case of horizontal installation	200 km	
Interval in case of vertical installation or strokes < 65 mm	100 km	
Amount of lubricant	0.15 cm^3	

Guide rail		
Interval	1000 km	
Amount of lubricant	ACS40	0.15 cm^3
	ACS60	0.30 cm^3

17 Decommissioning/disposal

INFORMATION

When the product reaches the end of its operational phase, it can be disposed of.

- ► Disconnect the product completely from the power supply.
- ► Comply with the locally applicable environmental and disposal regulations.

18 RoHS declaration

In terms of the EU Directive 2011/65/EU

Name and address of the manufacturer:

Zimmer Group GmbH

Am Glockenloch 2
77866 Rheinau, Germany
+49 7844 9138 0
info@zimmer-group.com
www.zimmer-group.com

We hereby declare that the incomplete machine described below

Product designation:	Compact axis
Type designation:	ACS

conforms to the requirements of the directive in its design and the version we put on the market.

Michael Hoch	Rheinau, Germany, 2024-07-01	
Authorized representative for compiling the relevant technical documents	(Place and date of issue)	Martin Zimmer (Legally binding signature) Managing Partner

19 Declaration of Incorporation (Machinery Directive)

In terms of the EU Machinery Directive 2006/42/EC (Annex II 1 B)

Name and address of the manufacturer:

Zimmer Group GmbH
Am Glockenloch 2
77866 Rheinau, Germany
+49 7844 9138 0
info@zimmer-group.com
www.zimmer-group.com

We hereby declare that the incomplete machine described below

Product designation:	Compact axis
Type designation:	ACS

conforms to the requirements of the Machinery Directive, 2006/42/EC, Article 2g, Annex VII, b – Annex II, b, in its design and the version we put on the market.

We hereby confirm that all the relevant basic health and safety requirements for the product have been observed and implemented.

A full list of applied standards can be obtained from the manufacturer.

We also declare that the specific technical documents were produced in accordance with Annex VII Part B of this Directive. We undertake to provide the market supervisory bodies with electronic versions of special documents for the incomplete machine through our documentation department, should they have reason to request them.

Commissioning of the incomplete machine is prohibited until it has been found that – where applicable – the machine in which the above-mentioned incomplete machine is to be installed complies with the Machinery Directive (2006/42/EC) and an EC Declaration of Conformity has been drawn up in accordance with Annex II 1 A.

Kurt Ross	Rheinau, Germany, 2024-07-01	
Authorized representative for compiling the relevant technical documents	(Place and date of issue)	Martin Zimmer (Legally binding signature) Managing Partner

20 Declaration of Incorporation

In terms of the EU Machinery Regulation 2023/1230, Annex V, Part B

Name and address of the manufacturer:

Zimmer Group GmbH

Am Glockenloch 2
77866 Rheinau, Germany
+49 7844 9138 0
info@zimmer-group.com
www.zimmer-group.com

We hereby declare that the incomplete machine described below

Product designation:	Compact axis
Type designation:	ACS

conforms to the requirements of the Regulation 2023/1230, Article 3.10, Annex III, Annex IV Part B, Annex V Part B, in its design and the version we put on the market.

A complete list of the standards applied and the essential safety and health protection requirements is available from the manufacturer.

The incomplete machine may only be commissioned if it has been ascertained, if applicable, that the machine or system in which the incomplete machine is to be installed satisfies the requirements of the EU Machinery Regulation 2023/1230 and an EC Declaration of Conformity has been drawn up in accordance with Annex V, Part A.

Kurt Ross	Rheinau, Germany, 2027-01-20	
Authorized representative for the compilation of relevant technical documents	(Place and date of issuance)	Martin Zimmer (Legally binding signature) Managing Partner

21 Declaration of Conformity

In terms of the EC Directive 2014/30/EU on electromagnetic compatibility

Name and address of the manufacturer:

Zimmer Group GmbH
Am Glockenloch 2
77866 Rheinau, Germany
+49 7844 9138 0
info@zimmer-group.com
www.zimmer-group.com

We hereby declare that the products described below

Product designation:	Compact axis
Type designation:	ACS

conforms to the requirements of the Electromagnetic Compatibility Directive 2014/30/EU in their design and the version we put on the market.

The following harmonized standards have been used:

DIN EN ISO 12100	Safety of machinery – General principles for design – Risk assessment and risk reduction
DIN EN 61000-6-3	EMC Generic standard, Emission standard for residential, commercial and light-industrial environments
DIN EN 61000-6-2	EMC generic standard, Immunity for industrial environments
DIN EN 61000-6-4	EMC Generic standards, Emission standard for industrial environments

A full list of applied standards can be obtained from the manufacturer.

Kurt Ross	Rheinau, Germany, 2024-07-01	
Authorized representative for compiling the relevant technical documents	(Place and date of issue)	Martin Zimmer (Legally binding signature) Managing Partner