INSTALLATION AND OPERATING INSTRUCTIONS

Compact axis
ACS
IO-Link
Software version SWA000208_I00

DDOC02157

THE KNOW-HOW FACTORY

www.zimmer-group.com

ZIMMER group

Glossary

Term	Explanation
Active warning	The product displays a warning if there is a possibility that an error will occur. The product can continue to move when there is an active warning. Causes that can lead to an error, e.g., incorrect parameters or operating conditions, should be taken into account and eliminated.
Active error	The product displays an error, for example, because previous warnings were not taken into account. Errors lead to a standstill of the motor and the power level. When an error occurs, the product is set to the *FAULT* or *LOCKED* status and the product can no longer move. Errors remain visible until they are acknowledged, even if the cause has been eliminated.
Saved error	The product displays a saved error when the cause of an error is eliminated but the error has still not been acknowledged.
NVM/ non-volatile memory	Non-volatile memory where information is stored permanently, including when the product is not in operation or not energized.
PDI/ Process data input	Data that are transmitted to the control system for each product cycle.
PDO/ Process data output	Data that are transmitted from the control system to the product for each product cycle.
Power cycle	Cycle in which the logic and actuator voltage of the product is switched off for min. 5 s, then switched back on.
STO/Safe torque off	Safety function of drives that prevents any torque from being generated in case of an emergency stop, even if the product is still connected to the voltage supply.
Control system	Device that is used to control a product. A control system could be a PLC, for example.

Data type	Explanation
UINT8	unsigned 8 bits
UINT16	unsigned 16 bits
UINT32	unsigned 32 bits
INT8	signed 8 bits
INT16	signed 16 bits
INT32	signed 32 bits
FLOAT	Simple floating point number with 32 bits (see IEEE 754)

EN / 2026-10-14
DDOC02157 / g

Contents

1 Introduction 6
1.1 Supporting documents 6
1.2 Notices and graphics in the installation and operating instructions 6

2 Safety notices 7

3 Proper use 8

4 Personnel qualification 8
4.1 Electricians 8
4.2 Specialists 8
4.3 Instructed personnel 8
4.4 Service personnel 8
4.5 Additional qualifications 8

5 Product description 9
5.1 Connections for product variants with STO 10
5.2 Connections for product variants without STO 10
5.3 LED display 11
5.4 Type plate 11

6 Functional description 11
6.1 Position measuring system 11

7 Technical data 12

8 Accessories/scope of delivery 12

9 Transportation/storage/preservation 12

10 Installation 13
10.1 Installing the product 14
10.1.1 Installing the product with mounting screws 14
10.1.2 Installing the product with clamping claws 15
10.2 Combining products 16
10.3 Installing additional components 17
10.4 Installing the power supply 17
10.4.1 PIN assignment of the STO 18
10.4.2 PIN assignment for IO-Link 18
10.4.3 Static charge 19
10.5 Heat dissipation 19

11 Commissioning 20
11.1 Note on software version 20
11.1.1 Functional change 20
11.1.2 Changes in the software update 21
11.2 Example code 21
11.3 Finite state machine 22
11.4 Communication 24
11.4.1 Cyclical data 24
11.4.2 Process data output 24
11.4.3 Process data input 24
11.4.4 PDO.CONTROL 25
11.4.5 PDO.COMMAND 26
11.4.6 PDO.POSITION 27
11.4.7 PDO.VELOCITY 27
11.4.8 PDI.STATUS 27
11.4.9 PDI.ERROR 28

EN / 2026-10-14
DDOC02157 / g

11.4.10 PDI.WARNING 28
11.4.11 PDI.ACTUAL_POSITION 28
11.5 Status of the LEDs 29
11.6 Quickstart 30
11.6.1 Enable/start-up 30
11.6.2 Easy Jog 31
11.6.3 Easy Positioning 33
11.6.4 Disabling 34
11.6.5 Error handling LOCKED state 34
11.6.6 Error handling FAULT state 35
11.7 Additional functions 35
11.7.1 Absolute positioning 35
11.7.2 Setting control parameters 37
11.7.3 Activating clamping elements 37
11.7.4 Position following error 38
11.7.5 Restoring default parameters 38

12 Error diagnosis 39
12.1 Error 39
12.2 Warnings 40

13 Parameter settings 42
13.1 Control parameters 42
13.1.1 POS_KP 42
13.1.2 VEL_KP 42
13.1.3 VEL_KI 42
13.1.4 POS_KFFV 42
13.1.5 POS_KFFA 43
13.1.6 VEL_KFFA 43
13.1.7 VEL_FBK_FIL_1_FREQ 43
13.2 Default parameters 43
13.2.1 ACS40 44
13.2.2 ACS60 44
13.3 Parameter settings for horizontal installation 44
13.3.1 ACS40 45
13.3.2 ACS60 45
13.4 Parameter settings for vertical installation 46
13.4.1 ACS40 46
13.4.2 ACS60 47

14 STO diagnostic test 48

15 ISDU table 50

16 Appendix 54
16.1 Movement finite state machine 54

17 Maintenance 56
17.1 Safe Torque Off (STO) 57
17.1.1 Safety specifications 57
17.1.2 STO diagnostic test 57
17.1.3 STO operating statuses 58
17.2 Relubricating the product 59

18 Decommissioning/disposal 59

19 RoHS declaration 60

20 Declaration of Incorporation (Machinery Directive) 61

EN / 2026-10-14
DDOC02157 / g

21 Declaration of Incorporation 62

22 Declaration of Conformity 63

1 Introduction

1.1 Supporting documents

NOTICE

Read through the installation and operating instructions before installing or working with the product.

The installation and operating instructions contain important notes for your personal safety. They must be read and understood by all persons who work with or handle the product during any phase of the product lifetime.

The documents listed below are available for download on our website www.zimmer-group.com:

- Installation and operating instructions
- Catalogs, drawings, CAD data, performance data
- Information on accessories
- Technical data sheets
- General Terms and Conditions (GTCs), including warranty information.

⇨ Only the documents currently available on the website are valid.

INFORMATION

These installation and operating instructions are valid for software version SWA000208_I00.

▶ Contact Customer Service for installation and operating instructions for older software versions.

In these installation and operating instructions, “product” replaces the product designation on the title page.

1.2 Notices and graphics in the installation and operating instructions

DANGER

This notice warns of an imminent danger to the life and health of people. Ignoring these notices can lead to serious injury or even death.

▶ You absolutely must comply with the described measures for avoiding these dangers.

⇨ The warning symbols are assigned according to the type of danger.

WARNING

This notice warns of a situation that is potentially hazardous to personal health. Ignoring these notices can cause serious injury or damage to health.

▶ You absolutely must comply with the described measures for avoiding these dangers.

⇨ The warning symbols are assigned according to the type of danger.

CAUTION

This notice warns of a situation that is potentially hazardous to people. Ignoring these notices can cause minor, reversible injuries.

▶ You absolutely must comply with the described measures for avoiding these dangers.

⇨ The warning symbols are assigned according to the type of danger.

NOTICE

This notice warns of possible material or environmental damage. Ignoring these notices can result in damage to the product or the environment.

▶ You absolutely must comply with the described measures for avoiding these dangers.

⇨ The warning symbols are assigned according to the type of danger.

INFORMATION

This category contains useful tips for handling the product efficiently. Failure to observe these tips will not result in damage to the product. This information does not include any information relevant to health or workplace safety.

2 Safety notices

CAUTION

Risk of injury and material damage in case of non-compliance

Installation, commissioning, maintenance and repairs may only be performed by qualified specialists in accordance with these installation and operating instructions.

The product is state-of-the-art.

The following are examples of situations in which the product may cause a hazard:

- The product is not properly installed, used or maintained.
- The product is not used for its designated purpose.
- The locally applicable regulations, laws, directives or guidelines are not observed.

▶ The product may only be used in accordance with these installation and operating instructions and the product's technical data. Any changes or additions to the intended use of the product, as well as modifications to the product, such as those in the following examples, require the written permission of the manufacturer:

- Use of the product under extreme conditions, such as aggressive fluids or abrasive dusts
- Additional drilled holes or threads

⇨ Zimmer Group GmbH accepts no liability for any damage caused by improper use. The operator bears sole responsibility.

▶ Make sure that the power supply is disconnected before you mount, adjust, modify, maintain or repair the product.

▶ Whenever work is carried out on the product, make sure that the product cannot be actuated by mistake.

▶ Perform maintenance tasks, retrofitting or attachment work outside of the machine's danger zone when possible.

▶ Always keep an adequate safety distance.

▶ Always perform maintenance at the required intervals.

▶ When using the product under extreme conditions, adjust the maintenance interval according to the degree of soiling.

▶ Check the completeness and tightening torques of all mounting screws.

NOTICE

Cybersecurity

▶ The operator is responsible for ensuring that unauthorized persons do not have access to the product, either physically or remotely.

3 Proper use

NOTICE

The product is only to be used in its original state with its original accessories, with no unauthorized changes and within the stipulated parameter limits and operating conditions.

Any other or secondary use is deemed improper.

- ► Operate the product only in compliance with the associated installation and operating instructions.
- ► Operate the product only when it is in a technical condition that corresponds to the guaranteed parameters and operating conditions.
- ⇨ Zimmer Group GmbH accepts no liability for any damage caused by improper use. The operator bears sole responsibility.

- The product is designed for moving and positioning loads within automated systems.
- The product is intended for industrial use.
- The product is designated for use in enclosed rooms.
- The product is not suited for use in a potentially explosive atmosphere.
- Direct contact with perishable goods/food is not permitted.
- The product must not be operated in an environment that is subjected to magnetic dust or chips.

4 Personnel qualification

WARNING

Injuries and material damage due to inadequate qualification

If inadequately qualified personnel perform work on the product, this can cause serious injuries and significant material damage.

- ► All work on the product must be performed by qualified personnel.
- ► Before working with the product, read the document in its entirety and make sure that you have understood everything.
- ► Observe country-specific accident prevention regulations and the general safety notices.

The following qualifications are a prerequisite for performing various types of work on the product.

4.1 Electricians

Electricians are able to perform work on electrical systems, can recognize and avoid possible dangers and know the relevant standards and provisions due to their technical training, knowledge and experience.

4.2 Specialists

Specialists are able to perform the assigned work, can recognize and avoid possible dangers and know the relevant standards and provisions due to their technical training, knowledge and experience.

4.3 Instructed personnel

Instructed personnel have been trained by the operating company on the tasks and possible dangers of improper behavior.

4.4 Service personnel

Service personnel are able to perform the assigned work and can recognize and avoid possible dangers due to their technical training, knowledge and experience.

4.5 Additional qualifications

Personnel who work with the product must be familiar with the valid safety regulations and laws as well as the standards, guidelines and laws listed in this document.

Personnel who work with the product must have facility-issued authorization to commission, program, configure, operate, maintain and also decommission this product.

5 Product description

The product is a linear axis with an electronically controlled ball screw.
It is used for positioning loads at a precise time and location and can be used as a component in automated systems.
The product can be used to implement linear movements in a stroke range of up to 100 or 150 mm.
It is suitable for applications which have high demands for dynamics and positioning accuracy.
Depending on the variant selected, the product may feature a clamping element.
The electronics are fully integrated into the axis profile. The product can optionally be controlled using IO-Link or CANopen.

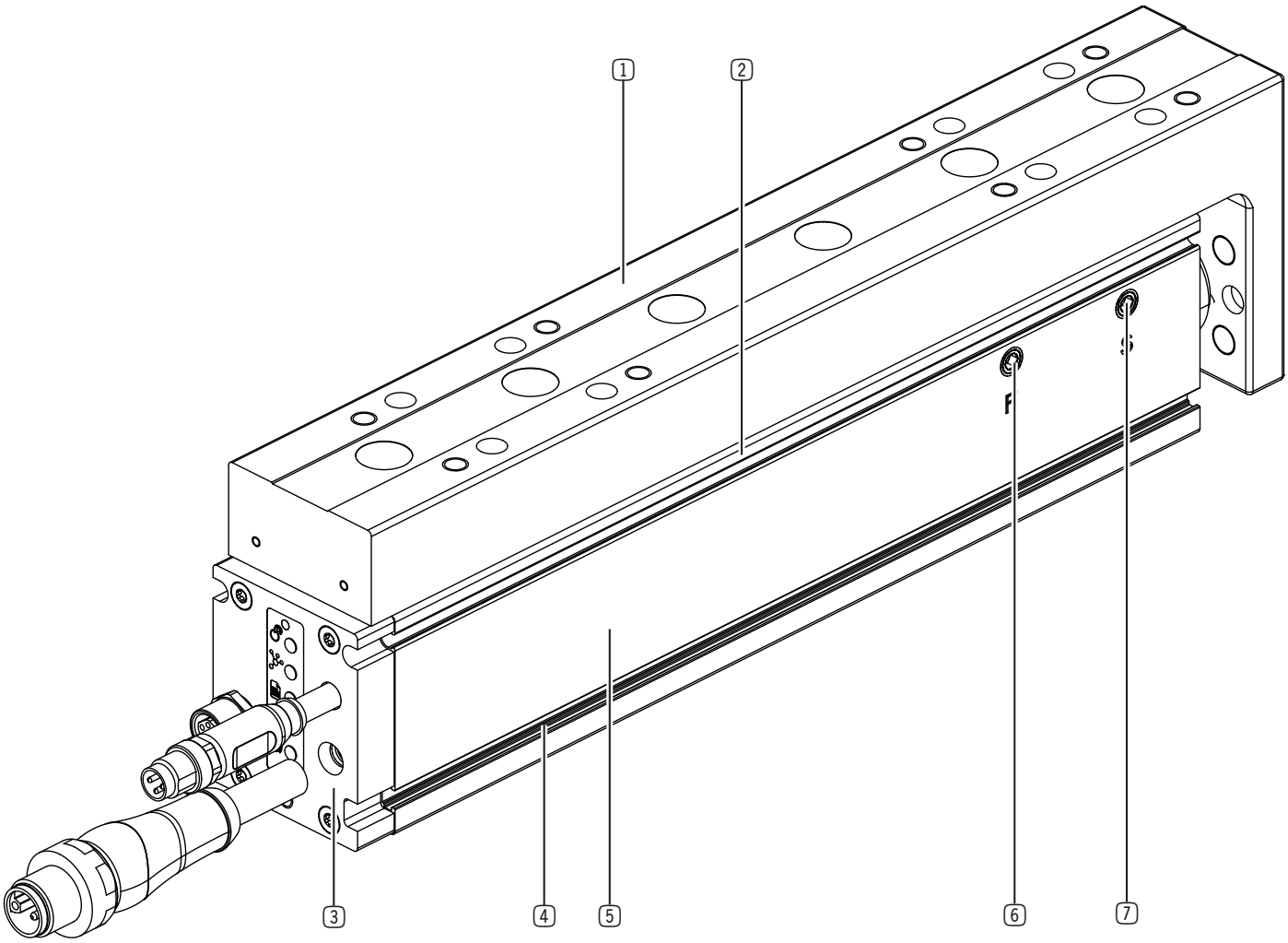

1. Carriages
2. Sensor slot
3. Cover with LED display
4. Assembly slot
5. Axis profile
6. Connections for lubricating nipples (linear guide)
7. Connections for lubricating nipples (ball screw)

5.1 Connections for product variants with STO

ACS40100IL12-01-A, ACS40100IL12-41-A

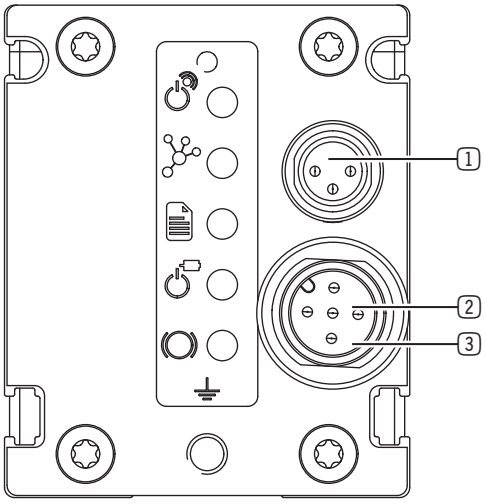

ACS60150IL20-01-A, ACS60150IL20-41-A

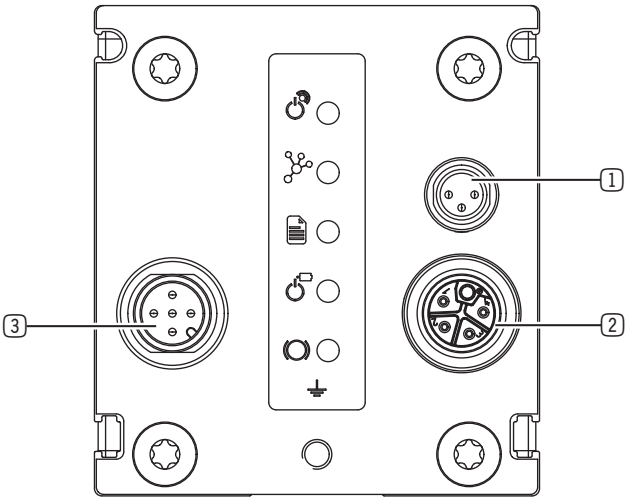

1 STO

2 Power

3 IO-Link

5.2 Connections for product variants without STO

ACS40100IL12-00-A, ACS40100IL12-40-A

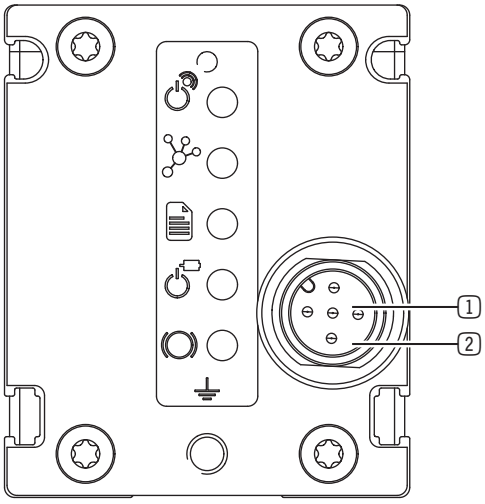

ACS60150IL20-00-A, ACS60150IL20-40-A

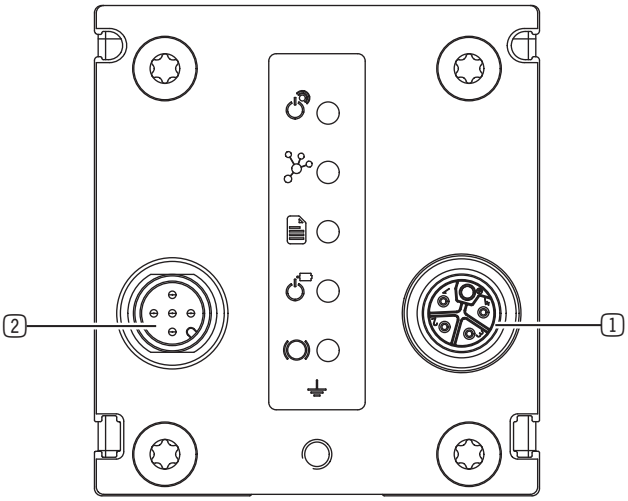

1 Power

2 IO-Link

5.3 LED display

1 Logic supply

2 Communication

3 Status

4 Actuator power supply

5 Clamping element

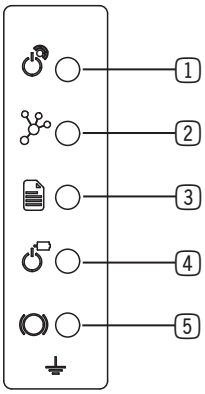

5.4 Type plate

A type plate is attached to the product.

The type plate shows the part number and serial number.

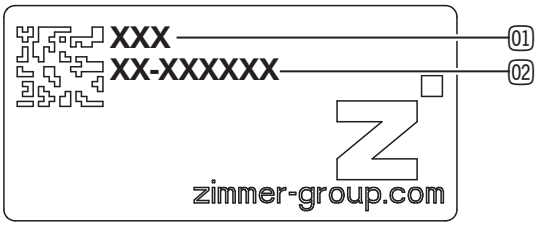

01 Part number

02 Serial number

6 Functional description

A brushless DC motor rotates a ball screw nut. The movement is transmitted to a spindle and results in a linear movement of the slide connected to it. A profile rail guide absorbs the forces and torques and ensures precise linear movement. The stroke length and speed are infinitely variable.

6.1 Position measuring system

NOTICE

Material damage caused by magnetic influences

The position measuring system can be damaged by external magnetic influences.

- ▶ Do not store the product together with magnets or other products that generate a magnetic field.
- ▶ Do not handle any tools that generate a magnetic field themselves or act as permanent magnets.
- ▶ Do not attach any magnets or components with ferromagnetic properties.

NOTICE

Material damage caused by magnetic dust and chips

Magnetic dust and chips can be attracted to the position measuring system, potentially damaging it or falsifying the measurement results.

- ▶ Use the product only in a suitable environment.
- ▶ Protect the position measuring system from the influences listed above.

7 Technical data

INFORMATION

► You can find the information in the technical data sheet on our website.

This data varies within the series, depending on the specific design.

8 Accessories/scope of delivery

INFORMATION

If any accessories not sold or authorized by Zimmer Group GmbH are used, the function of the product cannot be guaranteed. The accessories from Zimmer Group GmbH are specifically tailored to the individual products.

► For information on optional accessories and those included in the scope of delivery, refer to our website.

9 Transportation/storage/preservation

- ► Transport and store the product only in the original packaging.
- ► During transport, make sure that no uncontrolled movements can occur if the product is already mounted on the higher-level machine unit.
  - ► Prior to commissioning and after transport, check all power and communication connections as well as all mechanical connections.
- ► Observe the following points when storing the product for longer periods of time:
  - ► Keep the storage location as dust-free and dry as possible.
  - ► Avoid temperature fluctuations.
  - ► Avoid wind, drafts and formation of condensation.
  - ► Avoid direct sunlight.
- ► Clean all components until all contamination has been removed.
- ► Visually inspect all components.
- ► Remove any foreign objects.
- ► Remove potential corrosion spots properly.
- ► Seal electrical connections with suitable covers.

10 Installation

WARNING

Risk of injury due to uncontrolled movement

Risk of injury in case of uncontrolled movements of the machine or system into which the product is to be installed.

- ► Switch off the power supply of the machine before all work.
- ► Secure the power supply against being switched on unintentionally.
- ► Check the machine for any residual energy that may be present.

CAUTION

Risk of injury due to uncontrolled movement

Risk of injury in the event of uncontrolled movement of the product when the power supply is connected.

- ► Switch off the power supply to the product before all work.
- ► Secure the power supply against being switched on unintentionally.
- ► Check the product for any residual energy that may be present.

Assembly requirements	
Permissible flatness tolerance [mm]	0.1
Strength class of the mounting screws	8.8

INFORMATION

Further installation information:

- The mounting screws are not included in the scope of delivery.

- ► Install the product on an appropriate mounting surface in accordance with the flatness specifications.
- ► Make sure that the mounting piece is sufficiently rigid.
- ► Ensure the cleanliness of the connection surfaces.
- ► Please note the permitted tightening torques of the mounting screws at https://www.zimmer-group.com/en-us/td.

10.1 Installing the product

WARNING

Risk of injury and material damage in case of non-compliance

If unsuitable mounting elements are used or if the number of mounting elements is insufficient, the product may tear off as a result of the load.

- ► Use suitable mounting screws.
- ► Maintain the required minimum number of mounting elements depending on the load.
- ► Comply with the permitted tightening torques of the mounting screws.
- ► Use threadlocker.

CAUTION

Material damage in case of installation without suitable support

Long axis profiles can sag in case of improper installation.

- ► Install the product with supports at multiple points depending on the axis length or on a continuous, even mounting surface.

10.1.1 Installing the product with mounting screws

- ► Use at least four mounting screws.
- ► Drill appropriately sized holes in the mounting piece.
- ► Clean the mounting surfaces.
- ► Position the product on the mounting piece using straight pins.
- ► Mount the product on the mounting piece using the appropriate mounting screws.
- ► Comply with the permitted tightening torques of the mounting screws.

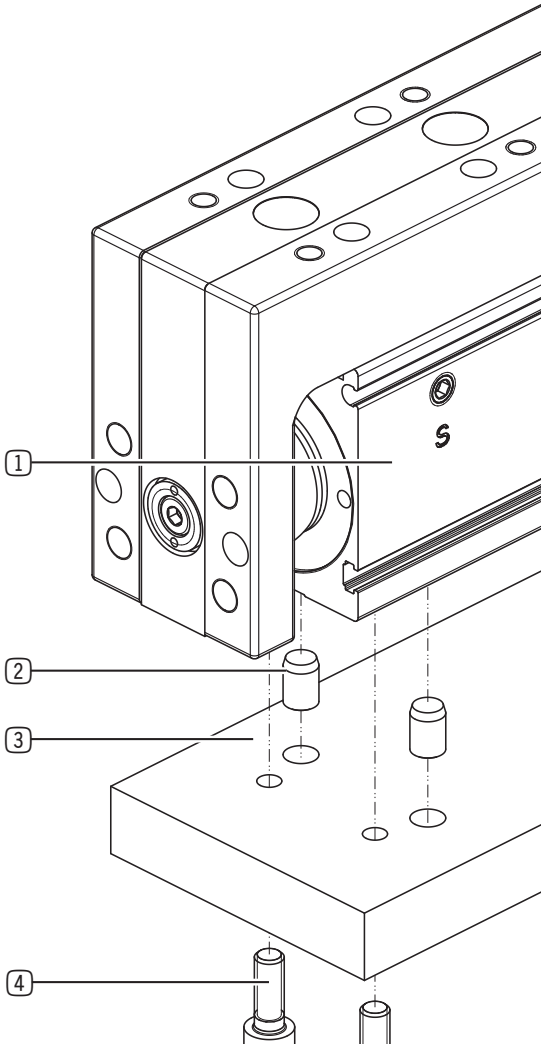

1 Axis profile

2 Straight pin

3 Mounting piece

4 Mounting screw

10.1.2 Installing the product with clamping claws

- ▶ Use at last four clamping claws with two mounting screws each.
- ▶ Drill appropriately sized holes in the mounting piece.
- ▶ Clean the mounting surfaces.
- ▶ Position the product on the mounting piece using straight pins.
- ▶ Swivel the clamping claws into the groove on the axis profile.
- ▶ Mount the product by screwing the mounting screws into the mounting piece.
- ▶ Comply with the permitted tightening torques of the mounting screws.

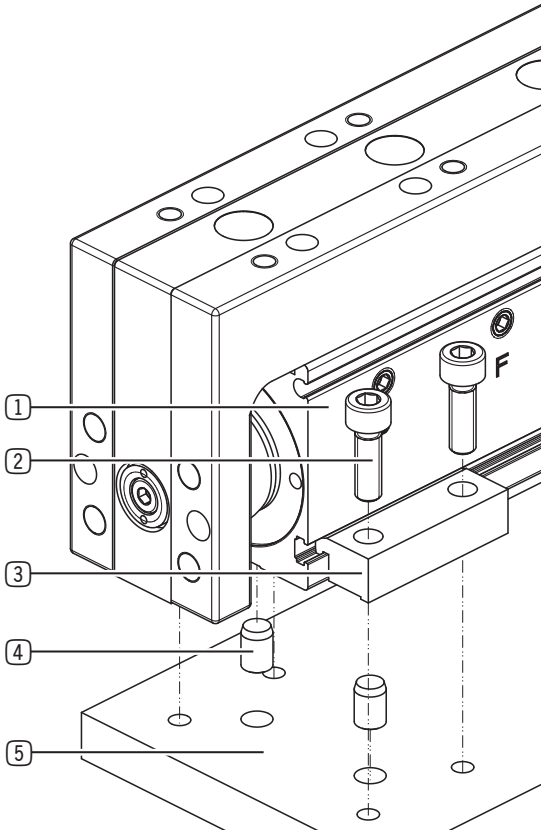

1. Axis profile
2. Mounting screw
3. Clamping claw
4. Straight pins
5. Mounting piece

10.2 Combining products

The following illustrations show two examples of combination variants.

- ► Clean the mounting surfaces.
- ► Use the corresponding mounting elements depending on the combination variant.
- ► Comply with the permitted tightening torques of the mounting screws.

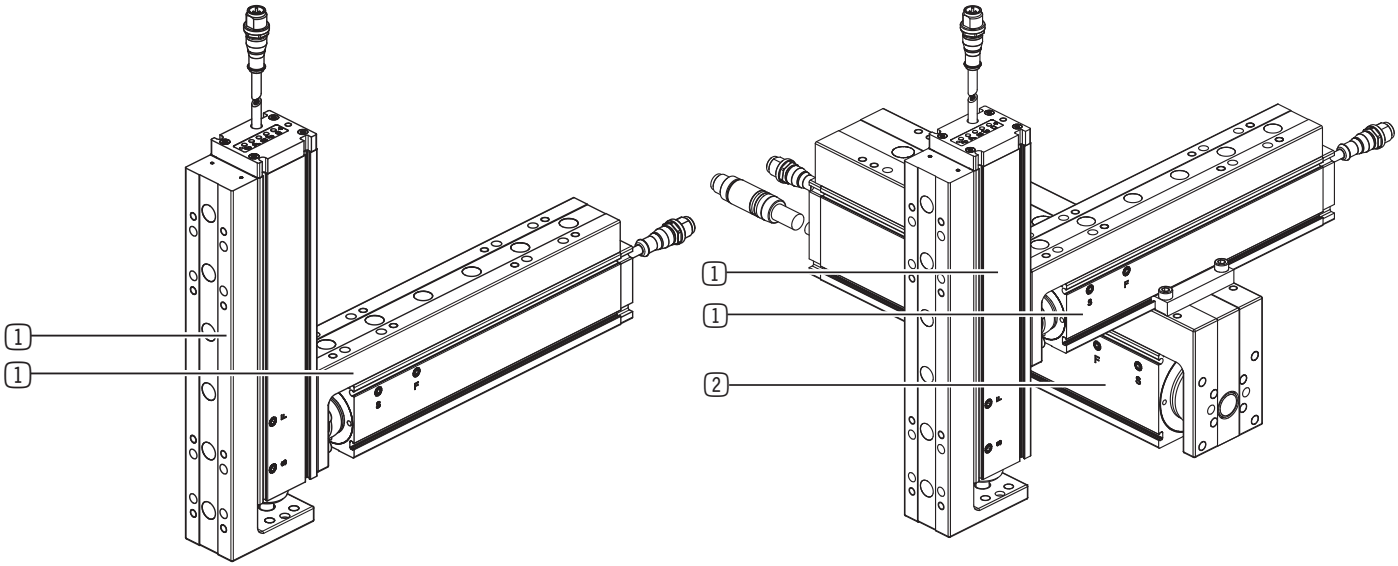

1 ACS40

2 ACS60

10.3 Installing additional components

- ► Slide size M3 low shape square nuts into the bottom slot on the axis profile.
- ► Install the desired components.

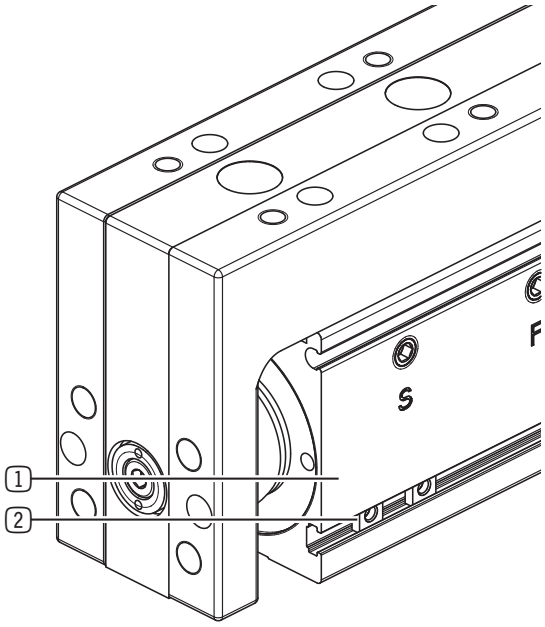

1 Axis profile

2 Square nut

10.4 Installing the power supply

WARNING

Risk of injury due to electrical voltage

Electric shocks can cause serious injuries as a result of touching parts carrying voltage.

- ► Switch off the energy supply of the machine before all work.
- ► Secure the energy supply against being switched on unintentionally.

NOTICE

Material damage in case of non-compliance

The cable mounted on the product can be subjected to a torsional angle of ± 50°.

- ► Do not route the cable so that it is strained.
- ► You must meet the minimum bending radius of 10x the outer diameter.
- ► Secure free-hanging cables to prevent excessive motion loads or pinching.
- ► The contacts of the energy supply must be dry, clean and undamaged at all times.
- ⇨ Damage to the contacts can result in malfunction of the product.

10.4.1 PIN assignment of the STO

Pin	Color	Function	Explanation
1	Brown	STO1	Control input
3	Blue	STO_RET	0 V STO ground
4	Black	STO2	Control input

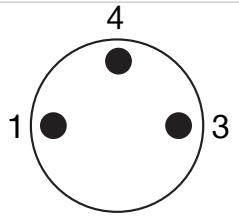

10.4.2 PIN assignment for IO-Link

NOTICE

Malfunctions in case of non-compliance

Without a 24 V sensor, the logic section cannot be supplied with sufficient power from the C/Q and PHY IO-Link, which can lead to malfunctions.

- ▶ Disconnect the 24 V sensor, GND sensor and C/Q at the same time to switch off the logic voltage.
- ▶ Connect the 24 V sensor, the GND sensor and the C/Q at the same time to switch on the logic voltage.

NOTICE

Malfunctions in case of non-compliance

Insufficient or unstable voltage can lead to malfunctions.

- ▶ Make sure that the power supply to the logic unit is stable and within the specified tolerances.

INFORMATION

The type of ports used for IO-Link products are *Port Class B*.

INFORMATION

- ▶ Observe the output power of the IO-Link master ports used.
- ▶ Use a separate voltage supply for the actuator voltage in case of insufficient power.

10.4.2.1 ACS40

Function	Typical amperage [A]	Supply voltage [V]
Logic supply	1	24 ±10%

Function	Circuit breaker	Supply voltage [V]
Actuator power supply	C4	24 ±10%

Power and communication

Pin	Color	Function	Explanation
1	Brown	Logic +	24 V logic voltage
2	White	Power +	24 V actuator voltage
3	Blue	Logic -	0 V logic voltage
4	Black	C/Q	IO-Link communication
5	Gray	Power -	0 V actuator voltage

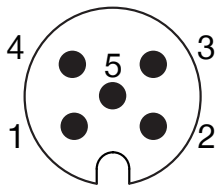

10.4.2.2 ACS60

Function	Typical amperage [A]	Supply voltage [V]
Logic supply	1	24 ±10%

Function	Circuit breaker	Supply voltage [V]
Actuator power supply	C10	24 ±10%

Power

Pin	Color	Function	Explanation
1	Brown	n. c.	Not connected
2	White	Power -	0 V actuator voltage
3	Blue	n. c.	Not connected
4	Black	Power +	24 V actuator voltage
FE	Gray	FE	Functional ground

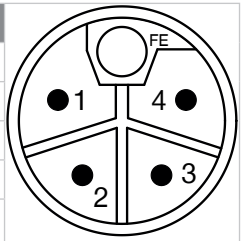

Communication

✓⓪⑤	Color	Function	Explanation
1	Brown	Logic +	24 V logic voltage
2	White	n. c.	Not connected
3	Blue	Logic -	0 V logic voltage
4	Black	C/Q	IO-Link communication
5	Gray	n. c.	Not connected

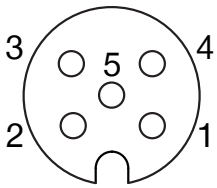

10.4.3 Static charge

NOTICE

Material damage from static charge

Grounding the product is recommended if ESD sensitive parts come into contact with the product.

Grounding is also recommended in applications that require high EMC shielding.

10.5 Heat dissipation

NOTICE

Material damage from overheating of the product

If the product is operated under a very high ambient temperature or with fast clock cycles on an ongoing basis, this can reduce its service life.

- ► If the product is exposed to high ambient temperatures, always install it on heat-conducting materials.
- ► Reduce the load as the temperature increases.

11 Commissioning

CAUTION

Risk of injury due to uncontrolled movement

Risk of injury in the event of uncontrolled movement of the product when the power supply is connected.

- ▶ Always keep an adequate safety distance.
- ▶ Operate the product from a safe distance behind a safety guard.

CAUTION

Risk of injury due to insufficient holding force

For product variants with a clamping element, the holding force may decrease due to frictional wear during commissioning or after prolonged periods of inactivity without the clamping mechanism being engaged.

- ▶ Perform regular maintenance depending on operating conditions.
- ▶ Follow the instructions provided by KEB Automation KG for the *COMBIPERM*product.

- ▶ Before commissioning, perform a functional check using production-like conditions.
- ▶ Check for proper installation by moving the slide to both end positions.
  - ▶ Make sure that the movement meets no resistance.

NOTICE

Exclusion of liability regarding unauthorized use

This product may only be used for the proper use described in this documentation.

In particular, the following actions are prohibited:

- Tampering with the product or software
- Bypassing or disabling security mechanisms
- Unauthorized access to the product or interfaces
- ▶ Please note that the manufacturer assumes no liability for any resulting damage.
- ▶ Please note that warranty and support claims will be void in the event of misuse.

11.1 Note on software version

11.1.1 Functional change

NOTICE

Malfunction in case of non-compliance

- ▶ In software version SWA000208_I00, the meaning of bit 7 in the *PDI.STATUS* has changed.
- ▶ Please note that *PDI.STATUS.new_order* also changes its status in response to an NOP COMMAND.

PDI.STATUS	Meaning
Software version SWA000208_H00	
PDI.STATUS.failed	Indicates that a drive command has failed.
PDI.STATUS.new_order	Changes the state when the product has received and acknowledged a new command.
Software version SWA000208_I00	
PDI.STATUS.in_target	Indicates that the product is within the target area.
PDI.STATUS.new_order	Changes the state when the product has received and acknowledged a new command.

11.1.2 Changes in the software update

- ► Make sure that the evaluation of PDI.STATUS.Bit7 and PDI.STATUS.Bit8 is adjusted during the update.
- ► Set all programs that evaluate *PDI.STATUS.failed* to *PDI.STATUS.in_target*.
- ► Make sure that PDI.STATUS.done and PDI.STATUS.in_target are not evaluated until PDI.Status.busy has changed to 0.
  - ► Note that a motion within a PLC sequence chain does not terminate with a confirmed status using PDI.STATUS.done or
    PDI.STATUS.failed.

11.2 Example code

It is assumed in the examples that communication with the product remains consistent.

This means that the variables must be updated simultaneously.

In the following example, *PDO.COMMAND* and *PDO.VELOCITY* are updated simultaneously via IO-Link with the *APPLY_PDO()* function.

```
CASE iStep OF
    0:
        PDO.COMMAND := 0;
        PDO.POSITION := 0;
        cnt := 0;
        iStep := 10;

    10:
        cnt := cnt + 1;
        IF (cnt > 100) THEN
            PDO.COMMAND := 16#104;
            PDO.POSITION := 1000;
            iStep := 20;
        END_IF

    20:
        ...

END_CASE;
...
APPLY_PDO(PDO);
```

11.3 Finite state machine

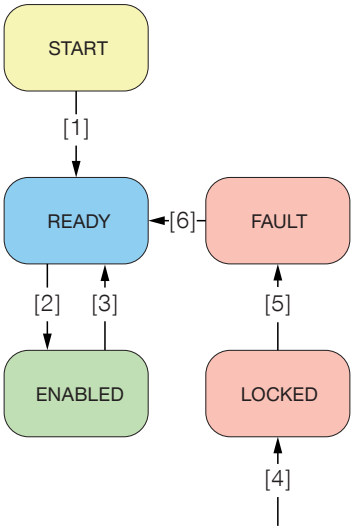

State	Description
START	The product is supplied with power and IO-Link communication is possible. The internal initialization sequence runs.
READY	The motor and the power level are switched off. There are no active or saved errors. The product is ready to be switched on.
ENABLED	The motor and the power level are switched on. The device can execute movement commands.
LOCKED	An active or saved error. The motor and the power level are switched off. *PDO.CONTROL* and *PDO.COMMAND* must be set to 0 before the error can be acknowledged.
FAULT	An active or saved error. The motor and the power level are switched off. This state can trigger an acknowledgment query.

Transition	Description
[1]	Automatic transition when the internal initialization sequence is completed.
[2]	The *ENABLE* command is received. *(PDO.CONTROL.enable = 1)*
[3]	The *ENABLE* command is reset. *(PDO.CONTROL.enable = 0)*
[4]	An error occurred.
[5]	*PDO.CONTROL* and *PDO.COMMAND* are set to 0.
[6]	There are no active or saved errors. *(PDI.ERROR = 0)*

The product status can be determined using *PDI.STATUS*.

► For more information, please refer to sections “11.4.5 PDO.COMMAND”, “11.4.8 PDI.STATUS” and “11.4.9 PDI. ERROR”.

State	PDI.STATUS			
	control_active	enabled	error	busy
START	0	0	0	0
READY	1	0	0	0
ENABLED	1	1	0	-
FAULT	1	0	1	0
LOCKED	1	0	1	1

The following example shows how the state in the PDIs can be retrieved.

```
IF PDI.STATUS.control_active = 0 THEN
    state := START;

ELSIF PDI.STATUS.enabled THEN
    state := ENABLED;

ELSIF PDI.STATUS.error AND PDI.STATUS.busy THEN
    state := LOCKED;

ELSIF PDI.STATUS.error THEN
    state := FAULT;

ELSE
    state := READY;

END_IF
```

11.4 Communication

11.4.1 Cyclical data

There is an option to control the product only with the process data that is transmitted in each cycle.

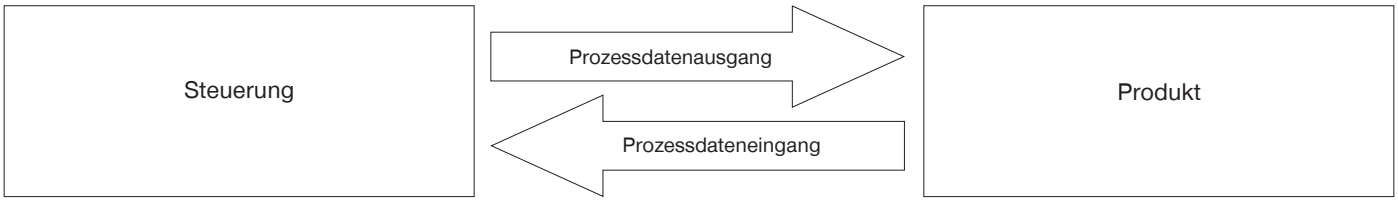

11.4.2 Process data output

NOTICE

Malfunctions in case of non-compliance

If *PDO.COMMAND* and *PDO.CONTROL* are not set to 0 during startup on, an error is generated and the module is set to the *LOCKED* status.

► Set *PDO.COMMAND* and *PDO.CONTROL* to 0 during startup.

	Name	Data type	Description
PDO	CONTROL	UINT8	► For more information, refer to section “11.4.4 PDO.CONTROL”.
	RESERVE_1	UINT8	Reserved ► Set this value to 0.
	COMMAND	UINT16	► For more information, refer to section “11.4.5 PDO.COMMAND”.
	POSITION	INT32	► For more information, refer to section “11.4.6 PDO.POSITION”.
	FORCE	UINT8	Reserved ► Set this value to 0.
	VELOCITY	UINT8	► For more information, refer to section “11.4.7 PDO.VELOCITY”.
	RESERVE_2	UINT16	Reserved ► Set this value to 0.

11.4.3 Process data input

	Name	Data type	Description
PDI	STATUS	UINT16	► For more information, refer to section “11.4.8 PDI.STATUS”.
	RESERVE_1	UINT16	Reserved
	ERROR	UINT16	► For more information, refer to section “11.4.9 PDI.ERROR”.
	WARNING	UINT16	► For more information, refer to section “11.4.10 PDI.WARNING”.
	ACTUAL_POSITION	INT32	► For more information, refer to section “11.4.11 PDI.ACTUAL_POSITION”.
	RESERVE_2	UINT32	Reserved

11.4.4 PDO.CONTROL

The finite state machine and the basic functions are controlled using *PDO.CONTROL*.

Bit	Name	Description
0	enable	Command *ENABLE* 1 = The product transitions from the *READY* status to the *ENABLED* status. 0 = The product transitions from the *ENABLED* status to the *READY* status.
1	reset_error	Command *ACK* 1 = The product attempts to acknowledge the error. ► For more information, refer to section “11.6.6 Error handling FAULT state”.
2	reserve_b2	Reserved ► Set this bit to 0.
3	open_clamping_element	Command *CLAMPING_ELEMENT* Enables the clamping element to be controlled manually in the *READY*, *FAULT* and *ACK* statuses. 1= Opens the clamping element. 0= Closes the clamping element.
4	reserve_b4	Reserved ► Set this bit to 0.
5	reserve_b5	Reserved ► Set this bit to 0.
6	reserve_b6	Reserved ► Set this bit to 0.
7	reserve_b7	Reserved ► Set this bit to 0.

11.4.5 PDO.COMMAND

The movements of the product are controlled using *PDO.COMMAND*.

► For more information, please refer to sections “11.6 Quickstart” and “11.7 Additional functions”.

INFORMATION

► Please note that movements can only be initiated when the product is in the *ENABLED* state.

Bit		Name	Description
0	Easy Command	jog+	The product travels in the direction of the maximum position when this bit is set. ► For more information, refer to section “11.6.2 Easy Jog”.
1		jog-	The product travels in the direction of the minimum position when this bit is set. ► For more information, refer to section “11.6.2 Easy Jog”.
2		move	The *Easy Positioning* command is initiated when this bit is set in combination with *PDO.COMMAND.direction*. ► For more information, refer to section “11.6.3 Easy Positioning”.
3		reserve_b3	Reserved
4		reserve_b4	Reserved
5		reserve_b5	Reserved
6		reserve_b6	Reserved
7		direction	The movement direction of the product changes when this bit is set. 0 = In direction of minimum position 1 = In direction of maximum position
8–15	advanced		This byte enables the modification and expansion of the basic movements specified in the *Easy Command* command.

11.4.5.1 Move commands

PDO.COMMAND																	Command
Bits																Value	
Advanced								Direction	Reserve_b6	Reserve_b5	Reserve_b4	Reserve_b3	Move	Jog-	Jog+		
15	14	13	12	11	10	9	8	7	6	5	4	3	2	1	0		
0	0	0	0	0	0	0	0	0	0	0	0	0	0	0	0	0x0000	No operation
0	0	0	0	0	0	0	0	0	0	0	0	0	0	0	1	0x0001	Easy Jog Maximum position
0	0	0	0	0	0	0	0	0	0	0	0	0	0	1	0	0x0002	Easy Jog Minimum position
0	0	0	0	0	0	0	0	0	0	0	0	0	1	0	0	0x0004	Easy Positioning maximum position
0	0	0	0	0	0	0	0	1	0	0	0	0	1	0	0	0x0084	Easy Positioning minimum position
0	0	0	0	0	0	0	1	0	0	0	0	0	1	0	0	0x0104	Absolute Positioning
1	0	0	0	0	0	0	0	0	0	0	0	0	0	0	0	0x8000	Stop

11.4.6 PDO.POSITION

PDO.POSITION defines the target position for the *Absolute Positioning* command.

INFORMATION

The *Easy Positioning* command does not use *PDO.POSITION*. The value can be set to 0.

Data type	INT32
Unit	µm

11.4.7 PDO.VELOCITY

PDO.VELOCITY defines the movement speed.

Data type	UINT8
Unit	% of the value set in ISDU_PROFILE_VEL

INFORMATION

► Refer to section “15 ISDU table” under *ISDU_PROFILE_VEL* and *ISDU_LIM_VEL_MAX* for information on setting the reference value and highest velocity.

11.4.8 PDI.STATUS

PDI.STATUS provides information on the product status and enables the tracking of the execution of movement commands.

Bit	Name	Description
0	control_active	If *control_active* = *1*, then the initialization sequence is completed. The switch to 1 corresponds to exiting the *START* status. ► For more information, refer to section “11.3 Finite state machine”.
1	enabled	If *enabled* = *1*, then the product is in the *ENABLED* status.
2	error	If *error* = *1*, then the product is in the *FAULT* or *LOCKED* status.
3	warning	If *warning* = *1*, then a warning is active.
4	clamping_element_open	If *clamping_element_open* = *1*, then the clamping element is open.
5	busy	If *busy* = *1*, then the following possibilities exist: • A movement command is being processed if the product is in the *ENABLED* status. • The product is in the *LOCKED* status if *PDI.STATUS.error* = 1.
6	done	► Refer to sections “11.6 Quickstart” and “11.7 Additional functions”.
7	in_target	► Refer to the sections “11.6 Quickstart” and “11.7 Additional functions.”
8	new_order	This changes the status when a new movement command was received and confirmed by the product.
9	order_rejected	If *order_rejected* = *1*, then the last move command was rejected by the module: This means that an invalid command or parameter was entered.
10	in_motion	If *in_motion* = *1*, then movement is taking place.
11	reserve_b11	0
12	reserve_b12	0
13	reserve_b13	0
14	reserve_b14	0
15	reserve_b15	0

NOTICE

Malfunction in case of non-compliance

At low speeds, *PDI.STATUS.done* may not be set correctly, while *PDI.STATUS.busy* and *PDI.STATUS.in_motion* remain active.

This behavior is due to the internal structure of the software: If the position following error (*ISDU.POSITION_FOLLOWING_ERROR*) remains within the set position window (*ISDU.POSITION_WINDOW*), the status bit *PDI.STATUS.done* is not set correctly.

The position following error depends on the set speed and acceleration.

- ► Increase the speed (*PDO.VELOCITY* or *ISDU.PROFILE_VELOCITY*) and acceleration (*ISDU.PROFILE_ACCELERATION*).
- ► Reduce the set position window (*ISDU.POSITION_WINDOW*).

11.4.9 PDI.ERROR

PDI.ERROR indicates the saved error with the highest priority.

INFORMATION

0 indicates that there are no longer any saved or active errors.

- ► For more information, refer to section “12.1 Error”.

11.4.10 PDI.WARNING

PDI.WARNING indicates the active warning with the highest priority.

INFORMATION

- ► For more information, refer to section “12.2 Warnings”.

11.4.11 PDI.ACTUAL_POSITION

PDI.ACTUAL_POSITION defines the current position.

Data type	INT32
Unit	µm

11.5 Status of the LEDs

LED display	Icon	Status		Meaning
Logic supply			LED lights up continuously green.	Operating voltage OK
			LED does not light up.	Operating voltage not OK
Communication			LED lights up continuously green.	Communication inactive
			LED flashes green.	Communication active
Status			LED lights up continuously yellow.	Product is in the *START* status.
			LED lights up continuously red.	Product is in the *FAULT* status. ⇨ The product cannot move.
			LED flashes red.	Product is in the *LOCKED* status. ⇨ The product cannot move.
			LED lights up continuously green.	Product is in the *ENABLED* status.
			LED flashes green.	Product is in the *ENABLED* status. ⇨ A warning is active.
			LED lights up continuously blue.	Product is in the *READY* status.
			LED flashes blue.	Product is in the *READY* status. ⇨ A warning is active.
Power supply			LED lights up continuously green.	Operating voltage OK
			LED flashes orange.	Warning: Operating voltage is too low
			LED lights up orange.	Error: Operating voltage is too low ⇨ The product cannot move.
			LED flashes red.	Warning: Operating voltage is too high
			LED lights up continuously red.	Error: Operating voltage is too high ⇨ The product cannot move.
			LED does not light up.	Operating voltage not OK
Clamping element			LED lights up continuously green.	Clamping element opened
			LED does not light up.	Clamping element closed

11.6 Quickstart

INFORMATION

The following example code refers to software version SWA000208_I00.

- ► Please note that the meaning of PDI.STATUS differs in older software versions.
- ► Please refer to section “11.1 Note on the software version”.

11.6.1 Enable/start-up

The following example shows how to perform a cold start and how to set the product to the *ENABLED* status.

```
CASE iStep OF

    0:
        PDO.COMMAND := 0; // Defined state for command
        PDO.CONTROL.enable := 0; // Defined state for control
        iStep := 10;

    10: // Logic and power supply can be switched on.
        iStep := 20;

    20:  // Wait for READY state
        IF PDI.STATUS.control_active THEN
            IF PDI.STATUS.error THEN
                iStep := 1000; // Error handling
            ELSE
                iStep := 30;
            END_IF
        END_IF

    30:  // The product can be switched on.
        PDO.CONTROL.enable := 1; // Command to switch on
        IF PDI.STATUS.enabled THEN
            iStep := 40;
        END_IF

    40:  // The device is in the ENABLED state.

END_CASE;
```

11.6.2 Easy Jog

This command sets the product to jog mode and slowly moves it in the direction of the minimum or maximum position.

INFORMATION

With Easy Jog, the product always uses a default value of 1% of the speed.
The value entered in *PDO.VELOCITY* has no influence on the speed.

PDO.COMMAND																	Command
Bits																Value	
Advanced								Direction	Reserve_b6	Reserve_b5	Reserve_b4	Reserve_b3	Move	Jog-	Jog+		
15	14	13	12	11	10	9	8	7	6	5	4	3	2	1	0		
0	0	0	0	0	0	0	0	0	0	0	0	0	0	0	1	0x0001	Easy Jog Maximum position
0	0	0	0	0	0	0	0	0	0	0	0	0	0	1	0	0x0002	Easy Jog Minimum position

// In this example, the two commands *Easy Jog Minimum Position* and *Easy Jog Maximum Position* are used to approach two different positions.

// The device is in the ENABLED state. The current PDI.STATUS.POSITION is 50000.

```
CASE iStep OF
    100:
        order_flag := PDI.STATUS.new_order; // Order_flag is used to detect that the device has accepted a new order
        PDO.COMMAND := 16#0002; // Easy Jog Minimum position
        iStep := 110;
    110:
        IF order_flag <> PDI.STATUS.new_order THEN // The device has accepted the order
            IF NOT PDI.STATUS.order_rejected THEN
                iStep := 120;
            ELSE
                iStep := 500;
            END_IF
        END_IF
    120:
        IF PDI.POSITION < 10000 THEN
            PDO.COMMAND := 16#0000;
            iStep := 130;
        ELSIF PDI.STATUS.Error THEN
            iStep := 500;
        END_IF
    130:
        order_flag := PDI.STATUS.new_order; // Order_flag is used to detect that the device has accepted a new order
        PDO.COMMAND := 16#0001; // Easy Jog Maximum position
        iStep := 140;
    140:
        IF order_flag <> PDI.STATUS.new_order THEN // The device has accepted the order
            IF NOT PDI.STATUS.order_rejected THEN
                iStep := 150;
            ELSE
                iStep := 500;
            END_IF
        END_IF
    150;
        IF PDI.POSITION > 50000 THEN
            PDO.COMMAND := 16#0000;
            iStep := 400;
        ELSIF PDI.STATUS.error THEN
            iStep := 500;
        END_IF
    400: // Done (OK)
    500: // Something wrong has happened
END_CASE;
```

INFORMATION

If the product is blocked during the movement, the position following error is activated.

► For more information, refer to section “11.6.4 Disabling”.

11.6.3 Easy Positioning

This command uses the *PDO.COMMAND.move* bit to travel to either a minimum or maximum position. The direction is defined by the *PDO.COMMAND.direction* bit.

The movement speed is defined by *PDO.VELOCITY*. If *PDO.VELOCITY = 0*, then the product uses a default value and performs a slow movement. Otherwise, the velocity entered in *PDO.VELOCITY* is used.

Example:

PDO.COMMAND																	Command
Bits																Value	
Advanced								Direction	Reserve_b6	Reserve_b5	Reserve_b4	Reserve_b3	Move	Jog-	Jog+		
15	14	13	12	11	10	9	8	7	6	5	4	3	2	1	0		
0	0	0	0	0	0	0	0	0	0	0	0	0	1	0	0	0x0004	Easy Positioning Maximum position
0	0	0	0	0	0	0	0	1	0	0	0	0	1	0	0	0x0084	Easy Positioning Minimum position

// In this example, the two commands *Easy Positioning Minimum position* and *Easy Positioning Maximum position* are used to move to the minimum and maximum position.
// The device is in the ENABLED state.

```
CASE iStep OF
    100:
        order_flag := PDI.STATUS.new_order; // Order_flag is used to detect that the device has accepted a new order
        PDO.COMMAND := 16#0084; // Easy positioning Minimum position
        PDO.VELOCITY := 20; // Set velocity value
        iStep := 110;
    110:
        IF order_flag <> PDI.STATUS.new_order THEN // The device has accepted the order.
            IF NOT PDI.STATUS.order_rejected THEN
                iStep := 120;
            ELSE
                iStep := 500;
            END_IF
        END_IF
    120:
        IF NOT PDI.STATUS.busy THEN // Movement done
            IF PDI.STATUS.done AND PDI.STATUS.in_target THEN
                order_flag := PDI.STATUS.new_order; // Order_flag is used to detect that the device has accepted a new order
                PDO.COMMAND := 16#0004; // Easy positioning Maximum position
                iStep := 130;
            ELSE
                iStep := 500;
            END_IF
        END_IF
    130:
        IF order_flag <> PDI.STATUS.new_order THEN // The device has accepted the order.
            IF NOT PDI.STATUS.order_rejected THEN
                iStep := 140;
            ELSE
                iStep := 500;
            END_IF
        END_IF
    140:
        IF NOT PDI.STATUS.busy THEN // Movement done
            IF PDI.STATUS.done AND PDI.STATUS.in_target THEN
                PDO.COMMAND := 16#0000;
                iStep := 400;
            ELSE
                iStep := 500;
            END_IF
        END_IF
    400: // Done (OK)
    500: // Something wrong has happened
END_CASE;
```

INFORMATION

If the product is blocked during the movement, the position following error is activated.

► For more information, refer to section “11.6.4 Disabling”.

11.6.4 Disabling

The following example shows how to set the product from the *ENABLED* status to the *READY* status.

INFORMATION

A movement command in the *READY* status generates an error.

► Always set *PDO.COMMAND* to 0 before you set *PDO.CONTROL.enable* to 0.

```
// The device is in the ENABLED state.

CASE iStep OF
    0:
        PDO.COMMAND := 0; // Stop all commands
        PDO.CONTROL.enable := 0; // Disable device
        iStep := 10;
    10:
        IF NOT PDI.STATUS.enabled THEN
            iStep := 20;
        END_IF
    20: // The device is in the READY state.
END_CASE;
```

11.6.5 Error handling LOCKED state

The *LOCKED* status prevents the deletion of errors and unintentional movements.

Before errors can be acknowledged or the clamping element opened, this status must be exited by setting *PDO.COMMAND* and *PDO.CONTROL* to 0.

Example:

```
// The device is in the LOCKED state.
CASE iStep OF
    1000: // PDO.COMMAND and PDO.CONTROL must be set to 0 to avoid an unexpected reset or restart.
        PDO.COMMAND := 0; // Stop all commands
        PDO.CONTROL.enable := 0; // Disable device
        IF NOT PDI.STATUS.busy THEN
            iStep := 1100;
        END_IF
    1100: // The device is in the FAULT state. Errors can be acknowledged and the terminal element can be opened.
END_CASE;
```

11.6.6 Error handling FAULT state

Errors can be acknowledged in the *FAULT* status via the *ACK* command *(PDO.COMMAND.error_reset)*.

The product attempts to acknowledge all errors in the *FAULT* status as long as the *ACK* command *(PDO.COMMAND.error_reset = 1)* is active.

If successful, the module switches to the *READY* status and the *ACK* command can be reset (*PDO.CONTROL.error_reset = 0*).

INFORMATION

► Leave the *ENABLE* command at 0 until the module is in the *READY* status so that no error is generated.

Example:

```
// The device is in the FAULT state and PDI.ERROR is not equal to 0.

CASE iStep OF
    1100:
        PDO.COMMAND := 0; // Stop all commands
        PDO.CONTROL.enable := 0; Disable device
        PDO.CONTROL.reset_error := 1; // Trigger to reset error
        iStep := 1110;
    1110: // Wait until all errors have been acknowledged.
        IF NOT PDI.STATUS.error THEN
            // The device is in READY state.
            PDO.CONTROL.reset_error := 0; // Release reset signal
            iStep := 400;
        END_IF
    400: // Done (OK)
END_CASE;
```

11.7 Additional functions

INFORMATION

The following example code refers to software version SWA000208_I00.

► Please note that the meaning of PDI.STATUS differs in older software versions.

► Please refer to the section “11.1 Software versioning” for more information.

11.7.1 Absolute positioning

The movement speed is defined by *PDO.VELOCITY*. If *PDO.VELOCITY = 0*, then the product uses a default value and performs a slow movement. Otherwise, the velocity entered in *PDO.VELOCITY* is used.

Enables the product to travel to the position specified in *PDO.POSITION*. Example:

PDO.COMMAND																	Command
Bits																Value	
Advanced								Direction	Reserve_b6	Reserve_b5	Reserve_b4	Reserve_b3	Move	Jog-	Jog+		
15	14	13	12	11	10	9	8	7	6	5	4	3	2	1	0		
0	0	0	0	0	0	0	1	0	0	0	0	0	1	0	0	0x0104	Absolute Positioning

```
// In this example, the device approaches two different positions.
// The device is in the ENABLED state.

CASE iStep OF
    100:
        PDO.POSITION := 10000;
        order_flag := PDI.STATUS.new_order;
        PDO.COMMAND := 16#0104; // Command Absolute Positioning
        PDO.VELOCITY :=  20;
        iStep := 110;
    110:
        IF order_flag <> PDI.STATUS.new_order THEN // The device has accepted the order.
            IF NOT PDI.STATUS.order_rejected THEN
                iStep := 120;
            ELSE
                iStep := 500;
            END_IF
        END_IF
    120:
        IF NOT PDI.STATUS.busy THEN // Movement done
            IF PDI.STATUS.done AND PDI.STATUS.in_target THEN
                order_flag := PDI.STATUS.new_order;
                PDO.POSITION := 30000;
                iStep := 130;
            ELSE
                iStep := 500;
            END_IF
        END_IF
    130:
        IF order_flag <> PDI.STATUS.new_order THEN // The device has accepted the order.
            IF NOT PDI.STATUS.order_rejected THEN
                iStep := 140;
            ELSE
                iStep := 500;
            END_IF
        END_IF
    140:
        IF NOT PDI.STATUS.busy THEN // Movement done
            IF PDI.STATUS.done AND PDI.STATUS.in_target THEN
                iStep := 400;
            ELSE
                iStep := 500;
            END_IF
        END_IF
    400: // Done (OK)
    500: // Something wrong has happened
END_CASE
```

INFORMATION

If the product is blocked during the movement, the position following error is activated.

► For more information, refer to section “11.6.4 Disabling”.

INFORMATION

In step 120, *PDO.COMMAND* is already set to *0x104 Absolute Positioning*. The new command simply sets a new value for *PDO.POSITION*. The product moves to the set new position.

11.7.2 Setting control parameters

The product behavior can be optimized by modifying the control parameters.

The following control parameters can be adjusted.

► For more information, please refer to sections “15 ISDU table” and “13.1 Control parameters”.

- POS_KP
- VEL_KP
- VEL_KI
- POS_KFFV
- POS_KFFA
- VEL_KFFA
- VEL_FBK_FIL_1_FREQ

11.7.3 Activating clamping elements

WARNING

Risk of injury and material damage in case of non-compliance

If the clamping element is opened, this may induce uncontrolled product movements and cause injuries.

► Always keep an adequate safety distance.

INFORMATION

The status of the clamping element can be viewed with *PDI.STATUS.clamping_element_open*.

For product variants without a clamping element, the status bit *PDI.STATUS.clamping_element_open* remains permanently at 0. The *PDO.CONTROL.open_clamping_element* command is not evaluated in this case.

The type of control depends on the status of the product.

► Refer to the following table for the type of control.

State	Manual control of the clamping element
READY	possible
ENABLED	Not possible
FAULT	possible
LOCKED	Not possible
START	Not possible

Manual control of the clamping element is carried out with the *CLAMPING_ELEMENT* command.

11.7.4 Position following error

A position following error occurs when the actual position of the product deviates from the target position for a certain period of time.

If a position following error occurs, the product is set to the *LOCKED* status, the *PDI.STATUS.Error* bit is set to 1, *PDI.ERROR* is set to 0x0A01 and it stops moving.

By default, the position following error is activated after 500 ms with a tolerance of 1,000 µm. These two parameters can be changed via the following ISDUs.

- POSITION_FOLLOWING_ERROR_WINDOW: This parameter defines the tolerance range for the actual position. If the tolerance range is exceeded, a position following error occurs.
- POSITION_FOLLOWING_ERROR_TIMEOUT: This parameter defines the time span within which the actual position may deviate from the target position before a position following error occurs.

► For more information, refer to section “15 ISDU table”.

WARNING

Risk of injury and material damage in case of non-compliance

The position following error is deactivated if a time period of 0 ms is set for the *POSITION_FOLLOWING_ERROR_TIMEOUT* parameter. In this case, the product will always attempt to reach the target position, even if the movement is blocked during travel. If the product is physically unlocked, it will continue to move and may move in an uncontrolled manner and cause injury.

► Always keep an adequate safety distance.

11.7.5 Restoring default parameters

The default parameters of the device can be restored with the SystemCommands *application reset* or *back-to-box*.

► Write the corresponding value to the ISDU object *Index 0x02 Subindex 0x00*:

SystemCommand	Description	Value
application reset	Restores default values of user-specific parameters	0x81
back-to-box	Resets the product completely to factory settings	0x83

⇨ All parameter settings are reset to the default values.

With *back-to-box*, the following IO-Link tags are also reset:

- application-specific-tag
- function-tag
- location-tag

12 Error diagnosis

12.1 Error

Errors lead to a standstill of the motor and the power level. When an error occurs, the product is set to the *FAULT* or *LOCKED* status and the product can no longer move.

Errors remain visible until they are acknowledged, even if the cause has been eliminated.

Code	Warning	Possible cause	Measure
0x0000	No error	-	-
0x0101	Logic supply voltage low	• Logic supply voltage is below the permissible range.	▶ Check the supply voltage.
0x0102	Logic supply voltage high	• Logic supply voltage is above the permissible range.	▶ Check the supply voltage.
0x0103	Actuator supply voltage low	• Actuator supply voltage is below the permissible range.	▶ Check the supply voltage.
0x0104	Actuator supply voltage high	• Actuator supply voltage is above the permissible range.	▶ Check the supply voltage.
0x0302	Logic temperature high	• The temperature of the circuit board exceeds the permissible range.	▶ Provide sufficient ventilation and cooling. ▶ Make sure that the module moves freely. ▶ Ensure the appropriate operating temperature. ▶ Reduce the on-time of the application.
0x0304	Motor temperature high	• Motor temperature exceeds the permissible range.	▶ Provide sufficient ventilation and cooling. ▶ Make sure that the module moves freely. ▶ Ensure the appropriate operating temperature. ▶ Reduce the on-time of the application.
0x0401	Overcurrent	• Overcurrent protection is active.	▶ Set *PDO.CONTROL* = 0. ▶ Set *PDO.COMMAND* = 0. ▶ Execute the ACK command (*PDO.CONTROL.error_reset*).
0x05FF	Internal error	• Undefined	▶ Please contact Customer Service.
0x0701	Safety	• STO input circuit is interrupted	▶ Switch on the STO input circuit. ▶ Execute a restart.
0x0801	Finite state machine	• Invalid value in PDO.COMMAND in the READY status	▶ Set *PDO.CONTROL.enable* = 0. ▶ Execute the ACK command (*PDO.CONTROL.error_reset*).
0x0803	Finite state machine	• PDO.CONTROL.enable = 1 in FAULT state	▶ Set PDO.CONTROL.enable = 0. ▶ Execute the ACK command (*PDO.CONTROL.error_reset*).
0x0804	Finite state machine	• Invalid *PDO.CONTROL.open_clamping_element* in *ENABLED.*	▶ Set *PDO.CONTROL* = 0. ▶ Set *PDO.COMMAND* = 0. ▶ Execute the ACK command (*PDO.CONTROL.error_reset*).
0x0805	Finite state machine	• Invalid value in PDO.CONTROL or PDO.COMMAND when exiting the START status	▶ Set *PDO.CONTROL* = 0. ▶ Set *PDO.COMMAND* = 0. ▶ Execute the ACK command (*PDO.CONTROL.error_reset*).

Code	Warning	Possible cause	Measure
0x0A01	Movement	• Position following error has occurred.	▶ Change the values of *POS_FOLLOWING_ERROR_WINDOW* or *POS_FOLLOWING_ERROR_TIMEOUT*. ▶ Deactivate the position following error detection with *POS_FOLLOWING_ERROR_TIMEOUT* = 0.

12.2 Warnings

Warnings serve as an indication of possible discrepancies. The product can be operated during a warning.

As soon as the cause of the warning has been eliminated, it is automatically canceled by the product and must not be acknowledged.

Code	Warning	Possible cause	Measure
0x0000	No warning	-	-
0x0101	Logic supply voltage low	• Logic supply voltage is below the permissible range.	▶ Check the supply voltage.
0x0102	Logic supply voltage high	• Logic supply voltage is above the permissible range.	▶ Check the supply voltage.
0x0103	Actuator supply voltage low	• Actuator supply voltage is below the permissible range.	▶ Check the supply voltage.
0x0104	Actuator supply voltage high	• Actuator supply voltage is above the permissible range.	▶ Check the supply voltage.
0x0301	Temperature	• The temperature of the circuit board has fallen below the permitted range.	▶ Ensure the correct operating temperature.
0x0302	Temperature	• The temperature of the circuit board has exceeded the permitted range.	▶ Provide sufficient ventilation and cooling. ▶ Check that the product can move freely. ▶ Ensure the correct operating temperature. ▶ Reduce the application's duty cycle.
0x0303	Temperature	• The motor temperature has fallen below the permitted range.	▶ Ensure the correct operating temperature.
0x0304	Temperature	• The motor temperature has exceeded the permitted limit value.	▶ Provide sufficient ventilation and cooling. ▶ Check that the product can move freely. ▶ Ensure the correct operating temperature. ▶ Reduce the application's duty cycle.
0x0801	Finite state machine	• Invalid value in PDO.COMMAND in the READY status	▶ Set *PDO.CONTROL.enable* = 0. ▶ Execute the ACK command (*PDO.CONTROL.error_reset*).
0x0803	Finite state machine	• PDO.ENABLE = 1 in FAULT status	▶ Set PDO.CONTROL.enable = 0. ▶ Execute the ACK command (*PDO.CONTROL.error_reset*).
0x0805	Finite state machine	• Invalid value in PDO.CONTROL or PDO.COMMAND when exiting the START status	▶ Set *PDO.CONTROL* = 0. ▶ Set *PDO.COMMAND* = 0. ▶ Execute the ACK command (*PDO.CONTROL.error_reset*).
0x0B01	Movement not possible	• The command sent is not recognized by the system or is not permitted.	▶ Check the command sent.

Code	Warning	Possible cause	Measure
0x0C01	Parameters	• The force target value exceeds the permitted range. For security reasons, the preset default value is used.	▶ Check the force target value sent.
0x0C02	Parameters	• The force target value input exceeds the permitted range. For security reasons, the preset default value is used.	▶ Check the speed target value sent.
0x0C03	Parameters	• The position target value exceeds the permitted range. For security reasons, the preset default value is used.	▶ Check the position target value sent.

13 Parameter settings

The parameter settings for various configurations are listed in the following sections.

These parameter settings can be changed to optimize the behavior of the product for the respective application.

13.1 Control parameters

13.1.1 POS_KP

Proportional Gain for Position Control

This parameter determines how strong the controller reacts to a position error. The higher the value, the faster and more aggressive the system reacts to deviations from the desired position.

- **Low value**: The system reacts slowly and smoothly, but the accuracy of the position may not be sufficient.
- **High value**: The system reacts quickly and precisely, but the risk of overshoots and instability increases.

► For more information, refer to section “15 ISDU table” under *ISDU_POS_KP (0x300)*.

13.1.2 VEL_KP

Proportional Gain for Velocity Control

This parameter determines how strong the controller reacts to a velocity error. The higher the value, the faster and more aggressive the system reacts to deviations from the desired velocity.

- **Low value**: The system reacts slowly and smoothly to velocity changes.
- **High value**: The system reacts quickly and precisely, but the risk of overshoots, jerking and instability increases.

► For more information, refer to section “15 ISDU table” under *ISDU_VEL_KP (0x305)*.

13.1.3 VEL_KI

Integral Gain for Velocity Control

This parameter corrects systematic errors (continual control deviation) by taking into account the deviation accumulated over time. This parameter helps eliminate remaining control deviations.

- **Low value**: The control deviation is correctly slowly and the system remains stable.
- **High value**: Errors are quickly reduced, but this can lead to overshoots or vibrations.

► For more information, refer to section “15 ISDU table” under *ISDU_VEL_KI (0x306)*.

INFORMATION

► The behavior is primarily adjusted with parameters *POS_KP*, *VEL_KP* and *VEL_KI*.

The parameter settings in the following tables act as a guide and are provided for faster commissioning.

The operator is responsible for adjustment to the customer-specific application.

13.1.4 POS_KFFV

Feedforward Velocity Gain for Position Control

This parameter is a feed forward parameter that takes into account the target velocity of the system before an error occurs. This parameter can help improve the reaction time because it does not react to errors, but rather directly takes into account the expected velocity requirement.

- **Application**: Suitable for systems in which fast and precise position changes are important.

► For more information, refer to section “15 ISDU table” under *ISDU_POS_KFFV (0x303)*.

13.1.5 POS_KFFA

Feedforward Acceleration Gain for Position Control

This parameter is a feed forward parameter that influences the target velocity of the system. This parameter is particularly useful in improving the dynamic reaction of the system by feeding the desired velocity directly into the control system.

- **Application**: Suitable for high dynamic systems in which fast velocity or deceleration actions are important.

► For more information, refer to section “15 ISDU table” under *ISDU_POS_KFFA (0x304)*.

13.1.6 VEL_KFFA

Feedforward Acceleration Gain for Velocity Control

This parameter is a feed forward parameter that influences the velocity control of the system. The target velocity is included directly in the velocity control loop and thus can improve system performance for fast velocity changes.

- **Application**: Suitable for systems in which a fast velocity is required.

► For more information, refer to section “15 ISDU table” under *ISDU_VEL_KFFA (0x308)*.

13.1.7 VEL_FBK_FIL_1_FREQ

Frequency for Velocity Feedback Filter

This parameter sets the filter frequency for the feedback of the velocity measurement (low-pass filter). Feedback filtering is used to reduce noise and disruptions that can be caused by external factors or the system itself.

- **Low filter frequency**: Smooths the feedback and reduces the noise. This can lead to a stable control, but may cause a delayed reaction.
- **High filter frequency**: Increases the sensitivity of the feedback, which enables a faster reaction. This can make the system more prone to disruptions.

► For more information, refer to section “15 ISDU table” under *ISDU_VEL_FBK_FIL_1_FREQ (0x309)*.

13.2 Default parameters

The position following error (0x220 / 0x221, timeout = 500 ms) and the I²t error (0x223 = 0) are activated by default. The halt option code (0x222 = 0) is deactivated.

Index	Name	Default	Description
0x220	following_error_window	1,000 (1,000 µm)	Activation condition: value ≠ 0 Deactivation condition: following_error_timeout = 0
0x221	following_error_timeout	500 (500 ms)	Activation condition: value ≠ 0 Deactivation condition: value = 0
0x222	halt_option_code	0 (deactivated)	Activation condition: value = 1 Deactivation condition: value = 0
0x223	i2t_error_option_code	0 (activated)	Activation condition: value = 0 Deactivation condition: value = 1

The following table shows the parameter settings as delivered.

If the default parameters are restored, the parameters assume these values.

► See section “11.7.5 Restoring default parameters” to restore the default parameters.

13.2.1 ACS40

Name	Description	Value
POS_KP	Proportional factor of the position control loop	0.0015
VEL_KP	Proportional factor of the speed control loop	2
VEL_KI	Integration factor of the speed control loop	80
POS_KFFV	Speed pre-control for the position control loop	0.5
POS_KFFA	Acceleration pre-control for the position control loop	0
VEL_KFFA	Acceleration pre-control for the speed control loop	0002
VEL_FDB_FIL_1_FREQ	Filter frequency for the actual speed value	1000

13.2.2 ACS60

Name	Description	Value
POS_KP	Proportional factor of the position control loop	0001
VEL_KP	Proportional factor of the speed control loop	5
VEL_KI	Integration factor of the speed control loop	50
POS_KFFV	Speed pre-control for the position control loop	0.3
POS_KFFA	Acceleration pre-control for the position control loop	0
VEL_KFFA	Acceleration pre-control for the speed control loop	0.01
VEL_FDB_FIL_1_FREQ	Filter frequency for the actual speed value	800

13.3 Parameter settings for horizontal installation

NOTICE

Malfunctions in case of non-compliance

Failure to observe these restrictions can lead to overheating, loss of performance, permanent damage to the motor or unwanted movements (e.g. falling loads).

- ► Adjust the operating parameters to the actual application.
- ► Adjust the pause time so that the motor operates within the thermal limits.
- ► Consider the sum of load weight, speed and ambient temperature to ensure a safe operating time.

- ► Note the following limitations, which may affect continuous operation, among other things:
  - **I²T limitation**: The motor is protected against overheating by the I²T protection function. If the permitted energy supply is exceeded over a longer period of time, the controller switches off automatically to prevent damage.
  - **Load weight**: Heavy loads or abruptly changing loads increase the thermal load on the motor.
    - ► Adjust the speed or pause times if necessary.
  - **Ambient temperature**: High ambient temperatures reduce the thermal reserve of the motor.
    - ► Plan breaks or reduced loads if temperatures are above the recommended range.

INFORMATION

The parameter settings in the following tables act as a guide and are provided for faster commissioning.

The operator is responsible for adjustment to the customer-specific application.

The parameter settings were determined under the following conditions:

- Power supply: 24 V / 40 A
- Cable length: 5 m
- Cable cross-section: 1.5 mm²

Continuous operation with these settings is only possible if pause times are observed. Otherwise, the motor may shut down due to excessive thermal load.

13.3.1 ACS40

Name	Description	Weight [kg]			
		0	1	5	10
POS_KP	Proportional factor of the position control loop	0.0055	0.0055	0.0015	0.0012
VEL_KP	Proportional factor of the speed control loop	1.8	1.8	4	4.5
VEL_KI	Integration factor of the speed control loop	50	50	80	100
POS_KFFV	Speed pre-control for the position control loop	0	0	0.5	0.8
POS_KFFA	Acceleration pre-control for the position control loop	0	0	0	0
VEL_KFFA	Acceleration pre-control for the speed control loop	0.0025	0.0025	0002	0004
VEL_FDB_FIL_1_FREQ	Filter frequency for the actual speed value	800	800	1000	1000
PROFILE_VEL	Maximum velocity [mm/s] with this configuration and the parameters	800	720	800	800
PROFILE_ACC	Maximum acceleration [m/s²] with this configuration and the parameters	20	20	13.2	7.5
PROFILE_DEC	Maximum deceleration [m/s²] with this configuration and the parameters	20	20	13.2	7.5

13.3.2 ACS60

Name	Description	Weight [kg]					
		0	1	5	8	10	15
POS_KP	Proportional factor of the position control loop	0.0012	0.0018	0001	0001	0001	0.0006
VEL_KP	Proportional factor of the speed control loop	15	15	20	20	20	20
VEL_KI	Integration factor of the speed control loop	50	50	50	50	50	50
POS_KFFV	Speed pre-control for the position control loop	0.85	0.85	0.3	0.3	0.3	0.5
POS_KFFA	Acceleration pre-control for the position control loop	0	0	0	0	0	0
VEL_KFFA	Acceleration pre-control for the speed control loop	0.01	0.01	0.01	0.01	0.01	0.01
VEL_FDB_FIL_1_FREQ	Filter frequency for the actual speed value	600	600	800	800	800	800
PROFILE_VEL	Maximum velocity [mm/s] with this configuration and the parameters	1000	840	800	700	640	600
PROFILE_ACC	Maximum acceleration [m/s²] with this configuration and the parameters	18	15	13	14	14	13
PROFILE_DEC	Maximum deceleration [m/s²] with this configuration and the parameters	18	15	13	14	14	13

13.4 Parameter settings for vertical installation

NOTICE

Malfunctions in case of non-compliance

Failure to observe these restrictions can lead to overheating, loss of performance, permanent damage to the motor or unwanted movements (e.g. falling loads).

- ► Adjust the operating parameters to the actual application.
- ► Adjust the pause time so that the motor operates within the thermal limits.
- ► Consider the sum of load weight, speed and ambient temperature to ensure a safe operating time.

- ► Note the following limitations, which may affect continuous operation, among other things:
  - **I²T limitation**: The motor is protected against overheating by the I²T protection function. If the permitted energy supply is exceeded over a longer period of time, the controller switches off automatically to prevent damage.
  - **Load weight**: Heavy loads or abruptly changing loads increase the thermal load on the motor.
    - ► Adjust the speed or pause times if necessary.
  - **Ambient temperature**: High ambient temperatures reduce the thermal reserve of the motor.
    - ► Plan breaks or reduced loads if temperatures are above the recommended range.

INFORMATION

The parameter settings in the following tables act as a guide and are provided for faster commissioning.

The operator is responsible for adjustment to the customer-specific application.

The parameter settings were determined under the following conditions:

- Power supply: 24 V / 40 A
- Cable length: 5 m
- Cable cross-section: 1.5 mm²

Continuous operation with these settings is only possible if pause times are observed. Otherwise, the motor may shut down due to excessive thermal load.

13.4.1 ACS40

Name	Description	Weight [kg]		
		0	1	5
POS_KP	Proportional factor of the position control loop	0004	0004	0002
VEL_KP	Proportional factor of the speed control loop	2	2	3
VEL_KI	Integration factor of the speed control loop	75	75	75
POS_KFFV	Speed pre-control for the position control loop	0.5	0.5	0.5
POS_KFFA	Acceleration pre-control for the position control loop	0	0	0
VEL_KFFA	Acceleration pre-control for the speed control loop	0.0025	0.0025	0003
VEL_FDB_FIL_1_FREQ	Filter frequency for the actual speed value	800	800	1000
PROFILE_VEL	Maximum velocity [mm/s] with this configuration and the parameters	710	660	540
PROFILE_ACC	Maximum acceleration [m/s²] with this configuration and the parameters	20	19	12
PROFILE_DEC	Maximum deceleration [m/s²] with this configuration and the parameters	20	19	12

13.4.2 ACS60

Name	Description	Weight [kg]				
		0	1	5	8	10
POS_KP	Proportional factor of the position control loop	0.0018	0.0015	0001	0.00041	0.00037
VEL_KP	Proportional factor of the speed control loop	15	15	13	10	11
VEL_KI	Integration factor of the speed control loop	50	50	50	50	50
POS_KFFV	Speed pre-control for the position control loop	0.7	0.7	0.5	0.5	0.5
POS_KFFA	Acceleration pre-control for the position control loop	0	0	0	0	0
VEL_KFFA	Acceleration pre-control for the speed control loop	0.05	0.01	0.01	0.01	0.01
VEL_FDB_FIL_1_FREQ	Filter frequency for the actual speed value	600	600	600	600	600
PROFILE_VEL	Maximum velocity [mm/s] with this configuration and the parameters	880	860	720	680	620
PROFILE_ACC	Maximum acceleration [m/s²] with this configuration and the parameters	18	15	13	12	12
PROFILE_DEC	Maximum deceleration [m/s²] with this configuration and the parameters	18	15	13	12	12

14 STO diagnostic test

Step	Handling instructions
1	▶ Switch the product on. • STO1 = 0 V • STO2 = 0 V
2	▶ Wait until the product is in the *READY* status.
3	▶ Attempt to set the product to the *ENABLED* status by setting *PDO.CONTROL.enable = 1*.
4	▶ Make sure that the power level is not activated via the software. • Status must be *LOCKED* • PDI.STATUS.error = 1 • PDI.ERROR = 0x0701
5	▶ Set the following statuses. • STO1 = 24 V • STO2 = 24 V
6	▶ Acknowledge the error to set the product to the *READY* status. ▶ For more information, refer to section “11.6.5 Error handling LOCKED state”.
7	▶ Set the following statuses. • STO1 = 24 V • STO2 = 0 V
8	▶ Remain in this status for at least 3.4 s.
9	▶ Attempt to set the product to the *ENABLED* status by setting *PDO.CONTROL.enable = 1*.
10	▶ Make sure that the power level is not activated via the software. • Status must be *LOCKED* • PDI.STATUS.error = 1 • PDI.ERROR = 0x0701
11	▶ Set the following statuses. • STO1 = 24 V • STO2 = 24 V
12	▶ Attempt to set the product to the *FAULT* status by setting *PDO.CONTROL = 0*.
13	▶ Attempt to remove the error by setting *PDO.CONTROL.reset_error = 1*.
14	▶ Remain in this status for at least 2 s.
15	▶ Make sure that the error has **not** been removed. • PDI.STATUS.error = 1 • PDI.ERROR = 0x0701
16	▶ Set *PDO.CONTROL = 0* and *PDO.COMMAND = 0*.
17	▶ Switch off the supply voltage.
18	▶ Remain in this status for at least 10 s.
19	▶ Switch the product on. • STO1 = 0 V • STO2 = 24 V
20	▶ Remain in this status for at least 3.4 s.
21	▶ Wait until the product is in the *READY* status.
22	▶ Attempt to set the product to the *ENABLED* status by setting *PDO.CONTROL.enable = 1*.
23	▶ Make sure that the power level is not activated via the software. • Status must be *LOCKED* • PDI.STATUS.error = 1 • PDI.ERROR = 0x07

Step	Handling instructions
24	▶ Set the following statuses. • STO1 = 24 V • STO2 = 24 V
25	▶ Attempt to set the product to the *FAULT* status by setting *PDO.CONTROL = 0*.
26	▶ Attempt to remove the error by setting *PDO.CONTROL.reset_error = 1*.
27	▶ Remain in this status for at least 2 s.
28	▶ Make sure that the error has **not** been removed. • PDI.STATUS.error = 1 • PDI.ERROR = 0x0701
29	▶ Set *PDO.CONTROL = 0* and *PDO.COMMAND = 0*.
30	▶ Switch off the supply voltage.
31	▶ Remain in this status for at least 10 s.
32	▶ Switch the product on. • STO1 = 24 V • STO2 = 24 V
33	▶ Wait until the product is in the *READY* status.
34	▶ Attempt to set the product to the *ENABLED* status by setting *PDO.CONTROL.enable = 1*.
35	▶ Make sure that the power level is active via the software. • Status must be *ENABLED*

15 ISDU table

Name	Index	Subindex	Data type	Access
ISDU_VENDOR_NAME	VENDOR_NAME This object contains the VendorName.			
	0x10	0x00	STRING	RO
ISDU_VENDOR_TEXT	VENDOR_TEXT This object contains the VendorText.			
	0x11	0x00	STRING	RO
ISDU_PRODUCT_NAME	PRODUCT_NAME This object contains the ProductName.			
	0x12	0x00	STRING	RO
ISDU_PRODUCT_ID	PRODUCT_ID This object contains the ProductID.			
	0x13	0x00	STRING	RO
ISDU_PRODUCT_TEXT	PRODUCT_TEXT This object contains the ProductText.			
	0x14	0x00	STRING	RO
ISDU_SERIAL_NUMBER	SERIAL_NUMBER This object contains the SerialNumber.			
	0x15	0x00	STRING	RO
ISDU_HW_REVISION	HARDWARE_REVISION This object contains the HardwareRevision.			
	0x16	0x00	STRING	RO
ISDU_FW_REVISION	FIRMWARE_REVISION This object contains the FirmwareRevision.			
	0x17	0x00	STRING	RO
ISDU_APPLICATION_SPECIFIC_TAG	APPLICATION_SPECIFIC_TAG This object contains the ApplicationSpecificTag.			
	0x18	0x00	STRING	RW
ISDU_FUNCTION_TAG	FUNCTION_TAG This object contains the FunctionTag.			
	0x19	0x00	STRING	RW
ISDU_LOCATION_TAG	LOCATION_TAG This object contains the LocationTag.			
	0x1A	0x00	STRING	RW
ISDU_FIRMWARE_VERSION	FIRMWARE_VERSION This object contains the FirmwareVersion.			
	0x64	0x00	STRING	RO
ISDU_FIRMWARE_ID	FIRMWARE_ID This object contains the FirmwareID.			
	0x65	0x00	STRING	RO
ISDU_PARAMETER_SET_VERSION	PARAMETER_SET_VERSION This object contains the current ParameterVersion.			
	0x6E	0x00	STRING	RO
ISDU_PARAMETER_SET_ID	PARAMETER_SET_ID This object contains the current ParameterID.			
	0x6F	0x00	STRING	RO

Name	Index	Subindex	Data type	Access
ISDU_TEMPERATURE_1	TEMPERATURE_1 This object contains the current temperature of the PCB 1 [°C].			
	0x100	0x00	FLOAT	RO
ISDU_POWER_SUPPLY	POWER_SUPPLY This object contains the current voltage on the power supply [V].			
	0x101	0x00	FLOAT	RO
ISDU_FOLLOWING_ERROR	FOLLOWING_ERROR This object provides the actual value of the following error, which is the difference between the position demand and actual position (error = demand – actual).			
	0x102	0x00	UINT32	RO
ISDU_TEMPERATURE_2	TEMPERATURE_2 This object contains the current temperature of the PCB 2 [°C].			
	0x103	0x00	FLOAT	RO
ISDU_TEMPERATURE_3	TEMPERATURE_3 This object contains the current temperature of the PCB 3 [°C].			
	0x104	0x00	FLOAT	RO
ISDU_PROFILE_VEL	PROFILE_VELOCITY This object contains the configured velocity [mm/s] normally attained at the end of the acceleration ramp. It is valid for both directions of motion. The velocity is restricted by LIMIT_VELOCITY_MAX and LIMIT_VELOCITY_MIN.			
	0x200	0x00	UINT32	RW
ISDU_PROFILE_ACC	PROFILE_ACCELERATION This object contains the configured acceleration [mm/s²] used by the profiler. The acceleration is restricted by LIMIT_ACCELERATION_MAX and LIMIT_ACCELERATION_MIN.			
	0x201	0x00	UINT32	RW
ISDU_PROFILE_DEC	PROFILE_DECELERATION This object contains the configured deceleration [mm/s²] used by the profiler. The deceleration is restricted by LIMIT_DECELERATION_MAX and LIMIT_DECELERATION_MIN.			
	0x202	0x00	UINT32	RW
ISDU_PROFILE_MIN_POS	PROFILE_MIN_POS This object contains the configured minimum position [µm]. The minimum position is restricted by PROFILE_MAX_POSITION and LIMIT_POSITION_MIN.			
	0x203	0x00	INT32	RW
ISDU_PROFILE_MAX_POS	PROFILE_MAX_POS This object contains the configured maximum position [µm]. The maximum position is restricted by LIMIT_POSITION_MAX and PROFILE_MIN_POSITION.			
	0x204	0x00	INT32	RW

Name	Index	Subindex	Data type	Access
ISDU_POS_WINDOW	POSITION_WINDOW This object contains the window [µm] around the position setpoint inside which target can be considered reached. PDI.STATUS.position_reached will be set whenever the following error is contained within the range defined in POSITION_WINDOW for longer than the amount of time defined in POSITION_WINDOW_TIME.			
	0x210	0x00	UINT32	RW
ISDU_POS_WINDOW_TIME	POSITION_WINDOW_TIME This object contains the amount of time [ms] that the error between position setpoint and actual position must be lower than POSITION_ WINDOW before detecting a target reached. PDI.STATUS.position_ reached will be set whenever the following error is contained within the range defined in POSITION_WINDOW for longer than the amount of time defined in POSITION_WINDOW_TIME.			
	0x211	0x00	UINT32	RW
ISDU_POS_FOLLOWING_ERROR_WINDOW	POSITION_FOLLOWING_ERROR_WINDOW This object contains the tolerated position values symmetrically to the position demand value [µm]. If the actual position is out of the POSITION_ FOLLOWING_ ERROR_WINDOW for a longer time than defined in POSITION_ FOLLOWING_ERROR_TIMEOUT, a position following error occurs.			
	0x220	0x00	UINT32	RW
ISDU_POS_FOLLOWING_ERROR_TIMEOUT	POSITION_FOLLOWING_ERROR_TIMEOUT This object contains the amount of time [ms] in which the current position may deviate from the position demand value. If the actual position is out of the POSITION_FOLLOWING_ ERROR_WINDOW for a longer time than defined in POSITION_ FOLLOWING_ERROR_TIMEOUT, a position following error occurs. By default the value is 500 and following error is activated.			
	0x221	0x00	UINT16	RW
ISDU_POS_KP	POSITION_KP This object contains the Position loop Kp parameter that allows configuring the Kp of the PID controller used for position regulation.			
	0x300	0x00	FLOAT	RW
ISDU_POS_KI	POSITION_KI This object contains the Position loop Ki parameter that allows configuring the Ki of the PID controller used for position regulation.			
	0x301	0x00	FLOAT	RW
ISDU_POS_KFFV	POSITION_KFFV This object contains the Position loop Kffv parameter that allows configuring the Kffv (feed-forward velocity constant) of the PID controller used for position regulation.			
	0x303	0x00	FLOAT	RW
ISDU_POS_KFFA	POSITION_KFFA This object contains the Position loop Kffa parameter that allows configuring the Kffa (feed-forward acceleration constant) of the PID controller used for position regulation.			
	0x304	0x00	FLOAT	RW
ISDU_VEL_KP	VELOCITY_KP This object contains the Velocity loop Kp parameter that allows configuring the Kp of the PID controller used for velocity regulation.			
	0x305	0x00	FLOAT	RW

Name	Index	Subindex	Data type	Access
ISDU_VEL_KI	VELOCITY_KI This object contains the Velocity loop Ki parameter that allows configuring the Ki of the PID controller used for velocity regulation VELOCITY_KI.			
	0x306	0x00	FLOAT	RW
ISDU_VEL_KFFA	VELOCITY_KFFA This object contains the Velocity loop Kffa parameter that allows configuring the Kffa (feed-forward velocity constant) of the PID controller used for velocity regulation.			
	0x308	0x00	FLOAT	RW
ISDU_VEL_FBK_FIL_1_FREQ	VELOCITY_FEEDBACK_FILTER_1_FREQUENCY This object contains the Velocity feedback filter 1 frequency [Hz] register that contains the cutoff frequency of the low pass filter for the velocity feedback filter 1.			
	0x309	0x00	UINT32	RW
ISDU_LIM_POS_MIN	LIMIT_POSITION_MIN This object contains the minimum position limit [µm].			
	0x400	0x00	INT32	RO
ISDU_LIM_POS_MAX	LIMIT_POSITION_MAX This object contains the maximum position limit [µm].			
	0x401	0x00	INT32	RO
ISDU_LIM_VEL_MIN	LIMIT_VELOCITY_MIN This object contains the minimum velocity limit [mm/s].			
	0x402	0x00	INT32	RO
ISDU_LIM_VEL_MAX	LIMIT_VELOCITY_MAX This object contains the maximum velocity limit [mm/s].			
	0x403	0x00	INT32	RO
ISDU_LIM_ACC_MIN	LIMIT_ACCELERATION_MIN This object contains the minimum acceleration limit [mm/s^2].			
	0x404	0x00	INT32	RO
ISDU_LIM_ACC_MAX	LIMIT_ACCELERATION_MAX This object contains the maximum acceleration limit [mm/s^2].			
	0x405	0x00	INT32	RO
ISDU_LIM_DEC_MIN	LIMIT_DECELERATION_MIN This object contains the minimum deceleration limit [mm/s^2].			
	0x406	0x00	INT32	RO
ISDU_LIM_DEC_MAX	LIMIT_DECELERATION_MAX This object contains the maximum deceleration limit [mm/s^2].			
	0x407	0x00	INT32	RO

16 Appendix

16.1 Movement finite state machine

This finite state machine demonstrates the changes in *PDI.STATUS* when a command is performed.

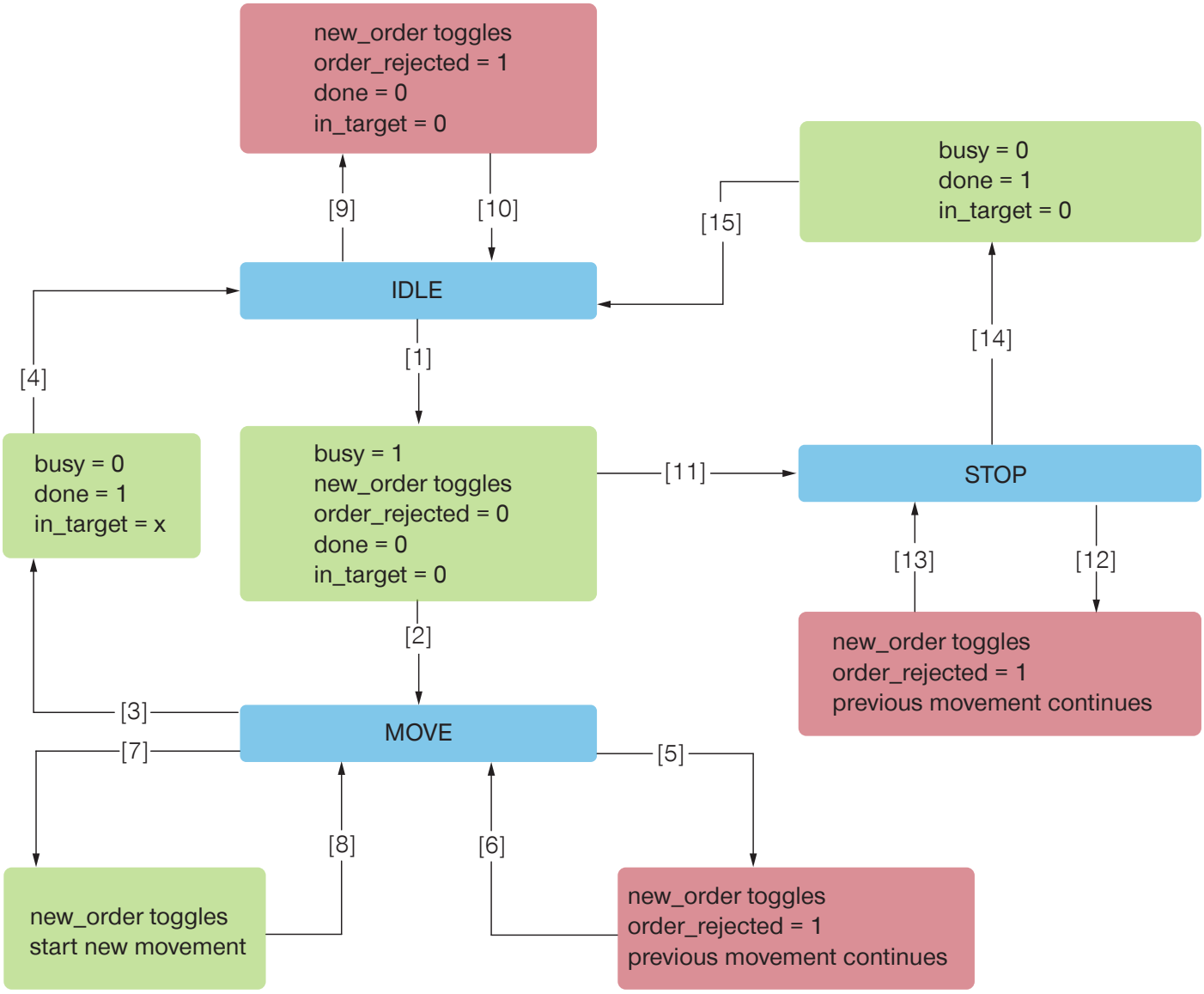

State	Description	Possibility to leave the state
IDLE	The product is ready to receive a new movement command.	A new command has been received; it can either be valid or invalid.
MOVE	The product performs the movement command.	• The movement was completed successfully or not as expected. • The *STOP* command was sent. • A new valid or invalid command was received during the movement.
STOP	The movement was stopped using the *STOP* command in *PDO.COMMAND*.	The product has stopped moving and is at a standstill.

Transition	Description
[1]	A new valid command has been set.
[2]	Automatic transition
[3]	The movement ended as expected.
[4]	Automatic transition
[5]	The movement did not end as expected.
[6]	Automatic transition
[7]	A new invalid command has been set.
[8]	Automatic transition
[9]	A new valid command has been set.
[10]	Automatic transition
[11]	A new invalid command has been set.
[12]	Automatic transition
[13]	*PDO.COMMAND* is set to 0x8000 (STOP).
[14]	Automatic transition
[15]	A new command has been set.
[16]	Automatic transition

17 Maintenance

NOTICE

Material damage resulting from blowing out with compressed air

Blowing out the product with compressed air can cause malfunctions and pose a risk of accidents.

► Never purge the product with compressed air.

NOTICE

Material damage caused by unsuitable cleaning materials

Seals, insulation, coatings and other surfaces may be damaged by solvent-based cleaning agents.

► Make sure that no liquids penetrate the product.

► Use chemically and biologically neutral cleaning agents.

► Use cleaning agents that are categorized as being nonhazardous to health.

► Use soft, lint-free cloths for cleaning the surface.

Use of the following cleaning agents is strictly prohibited:

- Acetone
- Cleaning solvent
- Nitrocellulose thinner/turpentine oil (solvents)

NOTICE

Material damage due to leaking lubricant

Excessive lubrication can cause moving machine parts to leak lubricant. This can cause soiling of the machine, the workpiece and the environment.

► Only use approved or recommended lubricants.

► Observe the manufacturer information for use of specific lubricants.

► Adhere to the lubrication interval.

► Avoid excessive lubrication.

► Remove leaking lubricant immediately and thoroughly.

17.1 Safe Torque Off (STO)

17.1.1 Safety specifications

ACS40

Specification of the safety function	Values
Standards	EN 61800-5-2:2017 EN 61508:2010 EN ISO 13849-1:2015
Safety-relevant parameters in accordance with IEC 61508:2010	SIL2 PFH: 4.1 x 10-7 1/h SFF: > 99% (High)
Safety-relevant parameters in accordance with EN ISO 13549-1:2015	PLd Category 3 DC: 99% (High) MTTFd: ≥ 100 years (High)

ACS60

Specification of the safety function	Values
Standards	EN 61800-5-2:2017 EN 61508:2010 EN ISO 13849-1:2015
Safety-relevant parameters in accordance with IEC 61508:2010	SIL2 PFH: 4.2 x 10-7 1/h SFF: > 99% (High)
Safety-relevant parameters in accordance with EN ISO 13849-1:2015	PLd Category 3 DC: 99% (High) MTTFd: ≥ 100 years (High)

17.1.2 STO diagnostic test

The function of the STO connection must be checked at least once every three months.

► Note that it is the operator's responsibility to prevent hazards that may result from motor movement.

► Information on a specific product variant can be found in the respective commissioning instructions on our website.

17.1.3 STO operating statuses

Mode	State	Status/Level STO1		Status/Level STO2		Status of the power level	STO message bit	STO error bit
Operating status	STO activated (no torque available)	0	< 10 V	0	< 10 V	Off	0	0
		Description						
		The system logic is supplied with power, but the STO function is activated. ⇨ No torque can be applied to the motor. STO deactivation is reported to the control system and to the safety circuit. This is provided to ensure safe torque deactivation in two-channel operation.						
	STO deactivated (torque available)	1	> 14 V	1	> 14 V	Can be activated	1	0
		Description						
		The STO function is deactivated and the motor can be supplied with torque. The motor can run under firmware control. This is the normal operating status.						
Error status	STO malfunction	0	< 10 V	1	> 14 V	Off	0	1
		1	> 14 V	0	< 10 V	Off	0	1
		Description						
		If a problem is detected with the two-channel STO function, an error status can be reported. This may be the case if the status varies over a longer period of time. In this status, application of torque to the motor is prevented. If this status remains unchanged for > 3.4 s, the STO is locked in the FAULT status. A restart is needed to reset this error.						
	Locked error status	x	-	x	-	Off	NOR (STO1, STO2)	1
		Description						
		After > 3.4 s of irregular STO activity, the driver remains in this status until the next power supply cycle.						
	Supply error	x	x	x	x	Off	x	x
		Description						
		If voltage outside the limit values is detected in the internal logic voltages, the system is set to a safe status. The system can only revert to a different status once safe logic voltages have been restored.						

INFORMATION

The STO1 and STO2 signals must change with a maximum time deviation of 3.4 s. Larger time deviations trigger an error.

Between 10 V and 14 V, the logic level of the STO signals is considered undefined. If an undefined level is present, STO1 and STO2 can assume different logic levels and thus trigger an interlocked error status.

17.2 Relubricating the product

NOTICE

Material damage due to insufficient lubrication

- ► Make sure that the product is extended or moving during lubrication.
- ► Move the product over the entire stroke regularly to ensure even lubrication.

INFORMATION

The specified values are recommendations.

In case of harsh operating conditions, such as contamination, vibrations, impact loads or similar conditions, shortened relubrication intervals are recommended.

If the service life is still not reached after 2 years, lubrication is recommended due to grease aging.

Recommended lubricants:

- THK AFB-LF
- Klüber ISOFLEX NCA 15
- Lubcon Turmogrease Highspeed L 252

Ball screw		
Interval in case of horizontal installation	200 km	
Interval in case of vertical installation or strokes < 65 mm	100 km	
Amount of lubricant	0.15 cm^3	

Guide rail		
Interval	1000 km	
Amount of lubricant	ACS40	0.15 cm^3
	ACS60	0.30 cm^3

18 Decommissioning/disposal

INFORMATION

When the product reaches the end of its operational phase, it can be disposed of.

- ► Disconnect the product completely from the power supply.
- ► Comply with the locally applicable environmental and disposal regulations.

19 RoHS declaration

In terms of the EU Directive 2011/65/EU

Name and address of the manufacturer:

Zimmer Group GmbH
Am Glockenloch 2
77866 Rheinau, Germany
+49 7844 9138 0
info@zimmer-group.com
www.zimmer-group.com

We hereby declare that the incomplete machine described below

Product designation:	Compact axis
Type designation:	ACS

conforms to the requirements of the directive in its design and the version we put on the market.

Michael Hoch	Rheinau, Germany, 2024-07-01	
Authorized representative for compiling the relevant technical documents	(Place and date of issue)	Martin Zimmer (Legally binding signature) Managing Partner

20 Declaration of Incorporation (Machinery Directive)

In terms of EU Machinery Directive 2006/42/EC (Annex II 1 B)

Name and address of the manufacturer:

Zimmer Group GmbH

Am Glockenloch 2
77866 Rheinau, Germany
+49 7844 9138 0
info@zimmer-group.com
www.zimmer-group.com

We hereby declare that the incomplete machine described below

Product designation:	Compact axis
Type designation:	ACS

conforms to the requirements of the Machinery Directive, 2006/42/EC, Article 2g, Annex VII, b – Annex II, b, in its design and the version we put on the market.

We hereby confirm that all the relevant basic health and safety requirements for the product have been observed and implemented.

A full list of applied standards can be obtained from the manufacturer.

We also declare that the specific technical documents were produced in accordance with Annex VII Part B of this Directive. We undertake to provide the market supervisory bodies with electronic versions of special documents for the incomplete machine through our documentation department, should they have reason to request them.

Commissioning of the incomplete machine is prohibited until it has been found that – where applicable – the machine in which the above-mentioned incomplete machine is to be installed complies with the Machinery Directive (2006/42/EC) and an EC Declaration of Conformity has been drawn up in accordance with Annex II 1 A.

Kurt Ross	Rheinau, Germany, 2024-07-01	
Authorized representative for compiling the relevant technical documents	(Place and date of issue)	Martin Zimmer (Legally binding signature) Managing Partner

21 Declaration of Incorporation

In terms of EU Machinery Regulation 2023/1230, Annex V, Part B

Name and address of the manufacturer:

Zimmer Group GmbH

Am Glockenloch 2
77866 Rheinau, Germany
+49 7844 9138 0
info@zimmer-group.com
www.zimmer-group.com

We hereby declare that the incomplete machine described below

Product designation:	Compact axis
Type designation:	ACS

in their design and in the version we have placed on the market comply with the requirements of Regulation 2023/1230, Article 3.10, Annex III, Annex IV, Part B and Annex V, Part B.

A complete list of the standards applied and the essential health and safety requirements is available from the manufacturer.

The incomplete machine must not be commissioned until it has been determined that – where applicable – the machine into which the incomplete machine is to be incorporated complies with the provisions of EU Machinery Regulation 2023/1230 and the EC Declaration of Conformity has been issued in accordance with Annex V, Part A.

Kurt Ross	Rheinau, Germany, 2027-01-20	
Authorized representative for compiling the relevant technical documents	(Place and date of issue)	Martin Zimmer (Legally binding signature) Managing Partner

22 Declaration of Conformity

In terms of the EC Directive 2014/30/EU on electromagnetic compatibility

Name and address of the manufacturer:

Zimmer Group GmbH

Am Glockenloch 2
77866 Rheinau, Germany
+49 7844 9138 0
info@zimmer-group.com
www.zimmer-group.com

We hereby declare that the products described below

Product designation:	Compact axis
Type designation:	ACS

conforms to the requirements of the Electromagnetic Compatibility Directive 2014/30/EU in their design and the version we put on the market.

The following harmonized standards have been used:

DIN EN ISO 12100	Safety of machinery – General principles for design – Risk assessment and risk reduction
DIN EN 61000-6-3	EMC Generic standard, Emission standard for residential, commercial and light-industrial environments
DIN EN 61000-6-2	EMC generic standard, Immunity for industrial environments
DIN EN 61000-6-4	EMC Generic standards, Emission standard for industrial environments

A full list of applied standards can be obtained from the manufacturer.

Kurt Ross	Rheinau, Germany, 2024-07-01	
Authorized representative for compiling the relevant technical documents	(Place and date of issue)	Martin Zimmer (Legally binding signature) Managing Partner