INSTALLATION AND OPERATING INSTRUCTIONS

Clamping and braking element
CBPS

DDOC02708

THE KNOW-HOW FACTORY

Content

1 Introduction ... 3
- 1.1 Supporting documents ... 3
- 1.2 Notices and graphics in the instructions ... 3

2 Safety notices ... 4

3 Proper use ... 5

4 Personnel qualification ... 6
- 4.1 Electricians ... 6
- 4.2 Specialists ... 6
- 4.3 Instructed personnel ... 6
- 4.4 Service personnel ... 6
- 4.5 Additional qualifications ... 6

5 Product description ... 7
- 5.1 Type plate ... 7

6 Functional description ... 7

7 Technical data ... 7

8 Accessories/scope of delivery ... 8

9 Transportation/storage/preservation ... 8

10 Installation ... 9
- 10.1 Installing the product ... 10
- 10.2 Installing accessories ... 11
  - 10.2.1 Installing the product as a standalone variant ... 11
  - 10.2.2 Installing the product on the cylinder ... 12
- 10.3 Removing the product ... 12

11 Commissioning ... 13
- 11.1 Adjusting the magnetic field sensors ... 13
- 11.2 Checking operational readiness ... 13
- 11.3 Emergency release ... 13

12 Error diagnosis ... 14

13 Maintenance ... 15

14 Decommissioning/disposal ... 15

15 Declaration of Conformity ... 16

16 Declaration of Conformity ... 17

EN / 2026-09-23

DDOC02708 / b

1 Introduction

1.1 Supporting documents

NOTICE

Read through the instructions before installing or working with the product.

The instructions contain important notes for your personal safety. They must be read and understood by all persons who work with or handle the product during any phase of the product lifetime.

The documents listed below are available for download on our website www.zimmer-group.com.

- Instructions
- Catalogs, drawings, CAD data, performance data
- Information on accessories
- Technical data sheets
- General Terms and Conditions, including warranty information.

⇨ Only those documents currently available on the website are valid.

In these instructions, "product" refers to the product designation on the title page!

1.2 Notices and graphics in the instructions

DANGER

This notice warns of an imminent danger to the life and health of people. Ignoring these notices can lead to serious injury or even death.

► You absolutely must comply with the described measures for avoiding these dangers!

⇨ The warning symbols are assigned according to the type of danger.

WARNING

This notice warns of a situation that is potentially hazardous to personal health. Ignoring these notices can cause serious injury or damage to health.

► You absolutely must comply with the described measures for avoiding these dangers!

⇨ The warning symbols are assigned according to the type of danger.

CAUTION

This notice warns of a situation that is potentially hazardous to persons. Ignoring these notices can cause minor, reversible injuries.

► You absolutely must comply with the described measures for avoiding these dangers!

⇨ The warning symbols are assigned according to the type of danger.

NOTICE

This notice warns of possible material and environmental damage. Ignoring these notices can result in damage to the product or the environment.

► You absolutely must comply with the described measures for avoiding these dangers!

⇨ The warning symbols are assigned according to the type of danger.

INFORMATION

This category contains useful tips for handling the product efficiently. Failure to observe these tips will not result in damage to the product. This information does not include any information relevant to health or workplace safety.

2 Safety notices

WARNING

Risk of injury due to objects being ejected

Certain components are under constant spring tension. When removing certain components, springs can spring out uncontrollably and cause serious injuries.

► Do not remove the retaining ring under any circumstances.

CAUTION

Risk of injury and material damage in case of non-compliance

The product is state-of-the-art.

The following are examples of situations in which the product may cause a hazard:

- The product is not properly installed, used or maintained.
- The product is not used for its designated purpose.
- The locally applicable regulations, laws, directives or guidelines are not observed.

► The product may only be used in accordance with these instructions and the product's technical data. Any changes or additions to the intended use of the product, as well as modifications to the product, such as those in the following examples, require the written permission of the manufacturer:

- Use of the product under extreme conditions, such as aggressive fluids or abrasive dusts
- Additional drilled holes or threads

⇨ Zimmer Group GmbH shall accept no liability for any damage caused by improper use. The operator bears sole responsibility.

► Whenever work is carried out on the product, make sure that the product cannot be actuated by mistake.

► Observe the specified maintenance intervals and specifications regarding the quality of the operating material.

► When using the product under extreme conditions, adjust the maintenance interval according to the degree of contamination.

► Check the completeness and tightening torques of all mounting screws.

3 Proper use

NOTICE

The product is only to be used in its original state with its original accessories, with no unauthorized changes and within the stipulated parameter limits and operating conditions.

Any other or secondary use is deemed improper.

► Operate the product only in compliance with the associated instructions.

► Operate the product only when it is in a technical condition that corresponds to the guaranteed parameters and operating conditions.

⇨ Zimmer Group GmbH shall accept no liability for any damage caused by improper use. The operator bears sole responsibility.

INFORMATION

In accordance with EN ISO 13849-1, the product is considered a safety-related part of a control system.

In accordance with EN ISO 13849-1, the product is considered a proven component of a control system.

The product can thus be classified as Control Category B and Control Category 1 in accordance with DIN EN ISO 13849-1.

With a test channel, the product can thus be classified as Control Category 2 in accordance DIN EN ISO 13849-1.

Multi-channel control ensures a high degree of diagnostic coverage. As a result, the product must be classified as Control Category 3 or higher in accordance with DIN EN ISO 13849-1.

- The clamping process may be carried out in a static and dynamic state.
- The product may only be used on round rods.
- The product is designed for force absorption on linearly moving machine products.
- The product must not be used as a brake in the rotating application.
- The product does not feature any guide characteristics.
  - ⇨ When using the product without a standard cylinder, a suitable guide must be provided depending on the application; for example, the guide available from Zimmer Group GmbH's line of accessories.
- The product may only be used in the following situations with additional protection and/or control engineering measures:
  - In equipment used to transport persons (e.g. elevators)
  - In vehicles
  - Underwater or in other fluids
  - In corrosive environments (e.g. in connection with acids)
  - In contact with abrasive media (e.g. grinding dust)
  - In a vacuum
  - In direct contact with food
  - In areas with a potentially explosive atmosphere

4 Personnel qualification

WARNING

Inadequate qualification can cause injury and material damage

If inadequately qualified personnel perform work on the product, this can cause serious injuries and significant material damage.

- ▶ All work on the product must be performed by qualified personnel.
- ▶ Before working with the product, read the document in its entirety and make sure that you have understood everything.
- ▶ Observe country-specific accident prevention regulations and the general safety notices.

The following qualifications are a prerequisite for performing various work on the product.

4.1 Electricians

Electricians are able to perform work on electrical systems, can recognize and avoid possible dangers and know the relevant standards and provisions due to their technical training, knowledge and experience.

4.2 Specialists

Specialists are able to perform the assigned work, can recognize and avoid possible dangers and know the relevant standards and provisions due to their technical training, knowledge and experience.

4.3 Instructed personnel

Instructed personnel have been trained by the operating company on the tasks and possible dangers of improper behavior.

4.4 Service personnel

Service personnel are able to perform the assigned work and can recognize and avoid possible dangers due to their technical training, knowledge and experience.

4.5 Additional qualifications

Persons who work with the product must be familiar with the valid safety regulations and laws as well as the standards, guidelines and laws listed in this document.

Personnel who work with the product must have facility-issued authorization to commission, program, configure, operate, maintain and also decommission this product.

5 Product description

The product is used for clamping and braking on round rods.

It was primarily developed for clamping and braking on piston rods.

The product is closed when de-energized.

The round rod is not damaged by the product.

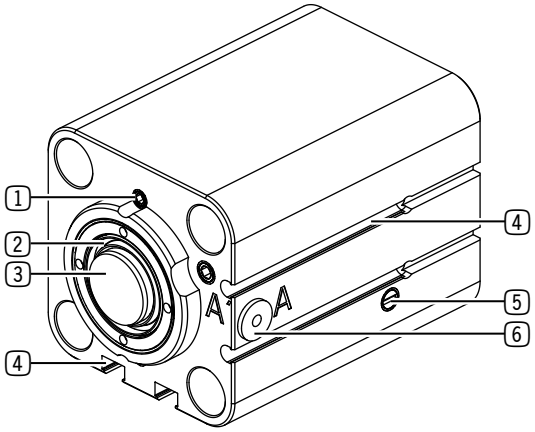

1 Emergency release

2 Wiper

3 Transport lock

4 Sensor slot

5 Vent hole

6 Pneumatic connection

5.1 Type plate

A type plate, as a laser engraving, is affixed to the housing of the product.

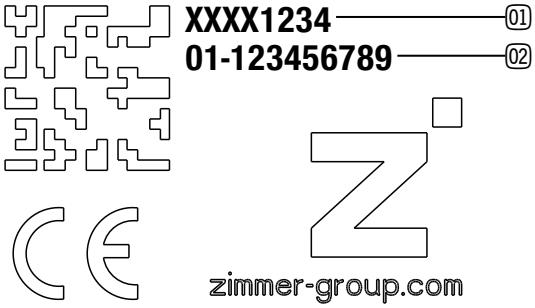

01 Article number

02 Confirmation number

6 Functional description

The clamping force is generated by a spring energy accumulator and transmitted to the round rod via a wedge gear. If compressed air is applied to the product, the pressure acts against the spring energy accumulator and the product opens.

7 Technical data

B10d value [cycles]	5 million
Brake cycles	up to 2000

INFORMATION

► You can find the information in the technical data sheet on our website.

This data varies within the series, depending on the specific design.

INFORMATION

The holding force corresponds to the maximum force to which the product may be loaded.

Due to the stiffness of the product, there may also be some offset below the holding force.

► If the application has specific requirements regarding stiffness, reduce the holding force until it reaches the required accuracy.

8 Accessories/scope of delivery

INFORMATION

If any accessories not sold or authorized by Zimmer Group GmbH are used, the function of the product cannot be guaranteed. Zimmer Group GmbH accessories are specifically tailored to the individual products.

- ► For optional accessories and those included in the scope of delivery, refer to our website.

9 Transportation/storage/preservation

NOTICE

Non-compliance may result in material damage.

The product may be damaged if the clamping process is triggered without the round rod or a transport lock between the clamping jaws.

- ► Only disconnect the product from the power supply when the round rod or a transport lock is between the clamping jaws.

- ► Transport and storage of the product must be done only with the original packaging.
- ► If the product has already been installed on the superordinate machine unit, care must be taken during transport to ensure that no unexpected movements can occur.
  - ► Before commissioning the product and after transport, check all power and communication connections as well as all mechanical connections.
- ► If the product is stored for an extended period, the following points are to be observed:
  - ► Keep the storage location as dust-free and dry as possible.
  - ► Avoid temperature fluctuations.
  - ► Avoid wind/drafts/water condensation formation.
  - ► Pack the product and do not expose it to direct sunlight during storage.
- ► Clean all components. There must be no soiling left on the components.
- ► Visually inspect all components.
- ► Properly remove potential corrosion spots.
- ► Close off unused connections using pressure-resistant closures.

10 Installation

WARNING

Risk of injury due to uncontrolled movements

Risk of injury in case of unexpected movement of the machine or system into which the product is to be installed.

- ► Switch off the energy supply of the machine before any work.
- ► Secure the power supply against being switched on unintentionally.
- ► Check the machine for any residual energy that may be present.

CAUTION

Risk of injury and material damage in case of non-compliance

If the mounting screws are tightened when not clamped, the product can shift and possibly be unable to achieve the optimum clamping force.

The round rod can also be damaged.

- ⇨ The product cannot fulfill its safety function.
- ► Only tighten the mounting screws when clamped.

NOTICE

General installation instructions

- ► Install the product on an appropriate mounting surface in accordance with the flatness specifications.
- ► Make sure that the mounting piece is sufficiently rigid.
- ► Ensure the cleanliness of the connection surfaces.
- ► Observe the minimum screw-in depth of the mounting screws of 0.9 x Ø.
- ► Please note the permitted tightening torques of the mounting screws at www.zimmer-group.com/en/td.
- ► Verify the permitted load capacity of the required screw connections in accordance with VDI 2230.

INFORMATION

Further installation information:

- The mounting screws are not included in the scope of delivery.

Assembly requirements	
Permissible flatness tolerance [mm]	0,03
Strength class of the mounting screws	≥ 8.8
Tolerance class of the round rod	min. f8, g8, h7
Surface of the round rod	Ra 0.2–3.2
Minimum yield strength of the round rod [N/mm²]	400
Hardening option 1 (case hardening)	Min. 54 HRC, min. 0.5 mm hardening depth
Hardness option 2 (hard chrome plating)	Min. 800 HV, min. 20 µm layer thickness

10.1 Installing the product

NOTICE

- ► Select the shortest possible hose length to ensure short response times.
- ► Use compressed air in accordance with DIN ISO 8573-1 [7:4:4].
- ► Make sure that the hoses cannot be pinched.

NOTICE

Material damage due to contamination

If the product is operated in a humid environment, moist air may be drawn in, which could cause malfunctions.

⇨ Zimmer Group GmbH recommends installing the vent line in a clean, dry environment.

INFORMATION

If you want to stack multiple products, the appropriate mounting screws with internal threads in the screw head are available as accessories.

► For more information, refer to the “Installing Accessories” section.

The product can be installed from multiple sides.

- ► Clean the round rod.
- ► Remove the cap on pneumatic connection A.
- ► Install the screw fitting on pneumatic connection A.
- ► Apply compressed air to the product.
- ⇨ The clamping process is interrupted.
- ► Remove the transport lock.
- ► Push the product onto the round rod.
- ► Loosely attach the mounting screws.
  - ► Make sure that the product lies on the mounting piece.
- ► Depressurize the product.
- ⇨ The product clamps the round rod.
- ► Open and close the product at least 10 times within 10 seconds so that it centers itself on the round rod.
- ► Tighten the mounting screws without tension when clamped.

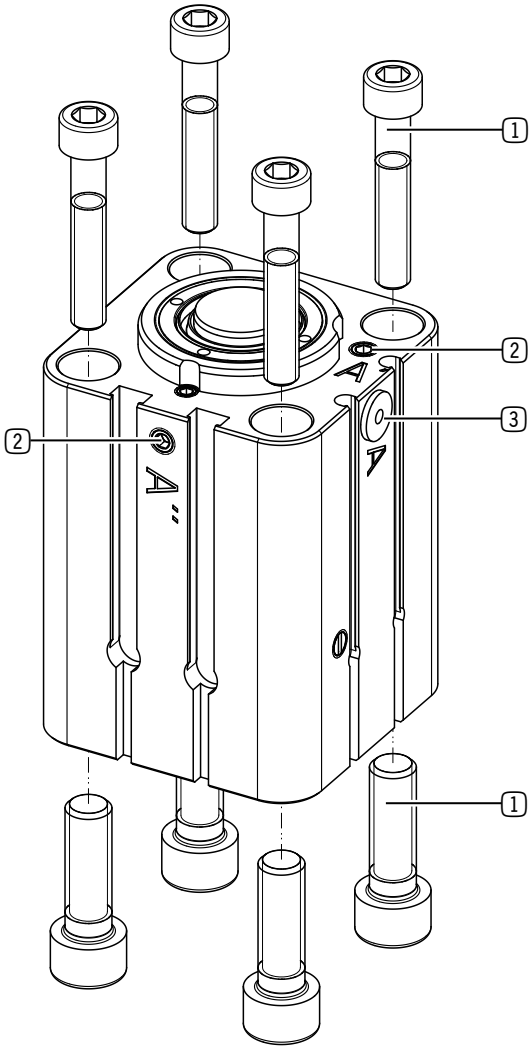

1 Mounting screw

2 Alternative connection

3 Connection A

10.2 Installing accessories

NOTICE

Non-compliance may result in material damage.

- ▶ Before installing an accessory, make sure it is suitable for use with the selected variant.
- ▶ You can find information on our website.
- ▶ Please contact Customer Service if you have any questions.

10.2.1 Installing the product as a standalone variant

- ▶ Insert the guide into the product.
  - ▶ Make sure the seals are installed correctly.
- ▶ If you want to stack multiple products, select the screws with an internal thread in the screw head from the accessories.
- ▶ If you want to install just a single product, choose standard screws.
- ▶ Install the product on a connecting plate as described in the “Installing the product” section.

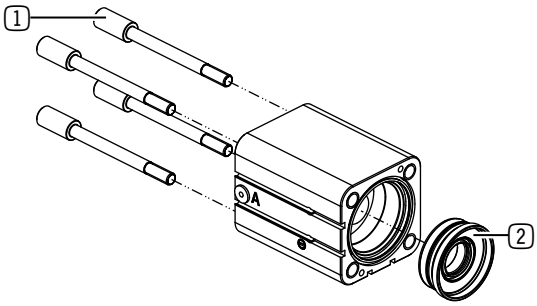

1 Mounting screw

2 Guide

10.2.1.1 Stacking products

- ▶ Push another product onto the round rod as described in the “Installing the product” section.
- ▶ If you then want to stack another product on top, choose the screws with internal threads in the screw head from the accessories again.
- ▶ If you do not want to stack any additional products, choose standard screws.
- ▶ Install the product into the screw heads of the previously installed product as described in the “Installing the product” section.

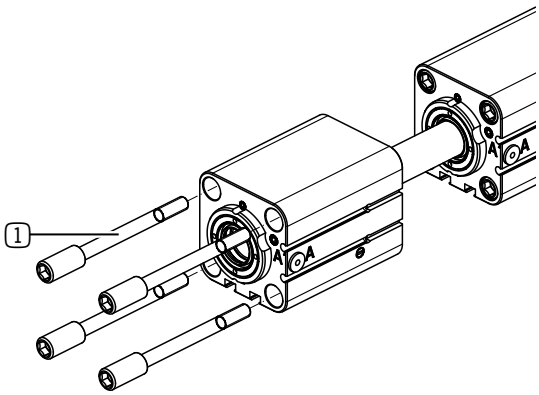

1 Mounting screw

10.2.2 Installing the product on the cylinder

10.2.2.1 Installing the piston rod extension

NOTICE

Non-compliance may result in material damage.

For applications involving a high number of cycles, we recommend using a cylinder with a factory-extended piston rod.

- ► Note the specifications regarding the minimum required piston rod extension.
- ► Please note that retroactively extending the piston rod using accessories can place increased stress on the wiper and thus lead to increased wear.
- ► Please note that for a cylinder with an extended piston rod, the lateral forces approved by the cylinder manufacturer are permissible. However, if the piston rod is extended using accessories, no lateral forces may act on the piston rod.

Product variant	Extension with external thread [mm]	Extension with internal thread [mm]
CBPS1040-A	56.3	-
CBPS2040-A	75.6	75.6
CBPS1050-A	53.7	-
CBPS2050-A	80.5	80.5
CBPS1063-A	56.3	-
CBPS2063-A	83.3	83.3
CBPS1080-A	61.1	-
CBPS2080-A	95.3	95.3
CBPS10100-A	77.3	-
CBPS20100-A	115.3	115.3

- ► Push the centering onto the extension.
- ► Push the extension onto the piston rod along with the centering device.
- ► Install the extension onto the piston rod by using a counter support to hold it in place against the wrench flats of the cylinder.
- ► Remove the centering.
- ► Install the product on the cylinder as described in the “Installing the product” section.

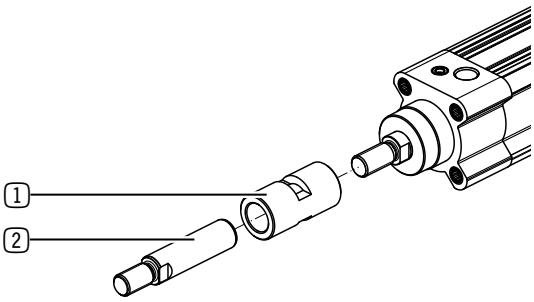

1 Centering

2 Extension

10.3 Removing the product

- ► Carry out disassembly in reverse order.
- ► If the product can no longer be opened by applying pressure, please contact Customer Service.

11 Commissioning

WARNING

Risk of injury due to uncontrolled movements

If the product comes loose, the piston rod may extend suddenly and cause injuries.

► Always keep an adequate safety distance.

INFORMATION

The product can also be used without wipers on request.

► Please note that dirt can get inside the product and cause it to malfunction.

► Please contact Customer Service if you have any questions.

11.1 Adjusting the magnetic field sensors

INFORMATION

The sensors are available as accessories.

► More information can be found in the instructions of the sensor.

INFORMATION

The *open* and *closed* positions can be sensed either by using two sensor slots or by using a 2-point magnetic field sensor.

11.2 Checking operational readiness

► Check the product and all connections for visible and audible leaks.

► Check all mounting screws for the prescribed tightening torque.

► Check whether the mounting piece can be moved easily when the product is open.

► Check whether the mounting piece cannot be moved up to the defined holding force or holding torque when the product is closed.

  ► Make sure that the permitted holding force is not exceeded.

    ► Observe the associated data sheet on our website.

  ► Make sure that the weight force of the mounting piece is added to the test force for vertical applications.

    ⇨ The test force applied must be less than the product's holding force.

► If one of the checks is negative, please contact Customer Service.

11.3 Emergency release

CAUTION

Risk of injury due to uncontrolled movements

Using the emergency release may result in injury.

► Make sure that no one is in the work area.

► Remove the grub screws.

► Gradually tighten and loosen the threaded rods or screws alternately until the product comes loose.

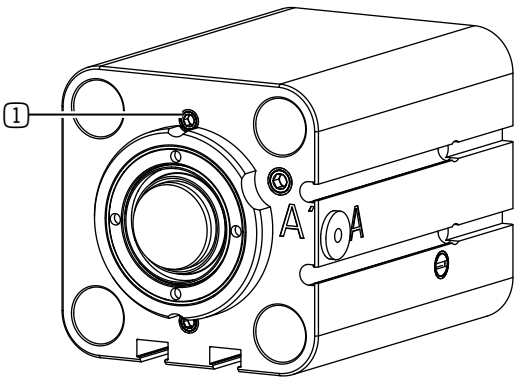

1 Grub screw

12 Error diagnosis

Error	Possible cause	Measure
The product does not open or rubs against the piston rod.	• No operating pressure or it is too low.	▶ Check the energy supply.
	• Leakages, blockages or crushed power supply lines	▶ Please contact Customer Service.
Product has a delay when opening.	• Valve is too small.	▶ Check the size of the valve.
	• The supply air or exhaust air is blocked.	▶ Clean all components. There must be no soiling left on the components.
	• The line between the valve and the product is too long.	▶ Keep the length of the line as short as possible.
Leakage is audible.	• Connections are leaking.	▶ Check the energy supply.
	• The product has reached the end of its service life.	▶ Replace the product.
The product does not achieve the required holding force or holding torque.	• The product does not fit the piston rod.	▶ Select the right product for your application.
	• The brake pads are worn out.	▶ Replace the product.
The product is difficult to move.	• The tolerance between the contact profile and the piston rod is incorrect.	▶ Check the dimensional tolerance. ▶ Please contact Customer Service.
	• The alignment is incorrect.	▶ Loosen the mounting screws and reinstall the product in accordance with the instructions in the manual.
	• Unfavorable lubrication conditions or excessive resistance caused by the wiper.	▶ Please contact Customer Service.

13 Maintenance

NOTICE

Material damage caused by unsuitable cleaning materials

Seals, insulation, coatings and other surfaces may be damaged by solvent-based cleaning agents.

- ► Make sure that no liquids penetrate the product.
- ► Use chemically and biologically neutral cleaning agents.
- ► Use cleaning agents that are categorized as being nonhazardous to health.
- ► Use soft, lint-free cloths for cleaning the surface.

The use of the following cleaning agents is strictly prohibited:

- Acetone
- Cleaning solvent
- Nitrocellulose thinner/turpentine oil (solvents)

The product is maintenance-free during the listed service life.

The service life may shorten under the following circumstances:

- Dirty environment
- Operation with impermissible compressed air
- Permissible temperature range not observed
- Operation without or with a dirty air filter
- Operation without a wiper
- Improper use and use that does not comply with the performance data

► Even though the product is maintenance-free as mentioned above, perform a regular visual inspection to check for any damage or contamination.

► Perform an annual visual inspection of the wipers.

⇨ Dismantling and reassembling the product without authorization may result in complications, as special installation equipment is required in some cases. Zimmer Group GmbH accepts no liability for any resulting malfunctions or damage.

14 Decommissioning/disposal

WARNING

Risk of injury due to objects being ejected

Certain components are under constant spring tension. When removing certain components, springs can spring out uncontrollably and cause serious injuries.

► Do not remove the retaining ring under any circumstances.

INFORMATION

When the product reaches the end of its operational phase, it can be disposed of.

- ► Disconnect the product completely from the power supply.
- ► Comply with the locally applicable environmental and disposal regulations.

15 Declaration of Conformity

In accordance with EC Directive 2006/42/EC on machinery (Article 2c, Annex II, Section 1 A)

Name and address of the manufacturer:

Zimmer Group GmbH
Am Glockenloch 2
77866 Rheinau, Germany
+49 7844 9138 0
info@zimmer-group.com
www.zimmer-group.com

We hereby declare that the safety components described below

Product designation:	Clamping and braking element with spring energy accumulator, pneumatic
Type designation:	CBPS

conforms to the requirements of the 2006/42/EC directive in its design and the version we put on the market.

The following harmonized standards have been used:

DIN EN ISO 12100	Safety of machinery - General principles for design - Risk assessment and risk reduction
DIN EN ISO 13849-1/-2	Safety of machinery - Safety-related parts of control systems
DIN EN ISO 4414	Pneumatics - General rules and safety requirements for systems and their components

A full list of applied standards can be obtained from the manufacturer.

Michael Hemler	Rheinau, Germany, 2026-06-01	
Authorized representative for compiling the relevant technical documents	(Place and date of issuance)	Martin Zimmer (Legally binding signature) Managing Partner

16 Declaration of Conformity

In terms of the EU Machinery Regulation 2023/1230, Annex V, Part A

Name and address of the manufacturer:

Zimmer Group GmbH
Am Glockenloch 2
77866 Rheinau, Germany
+49 7844 9138 0
info@zimmer-group.com
www.zimmer-group.com

We hereby declare that the safety components described below

Product designation:	Clamping and braking element with spring energy accumulator, pneumatic
Type designation:	CBPS

conforms to the requirements of the Regulation 2023/1230 in its design and the version we put on the market.

The following harmonized standards have been used:

DIN EN ISO 12100	Safety of machinery - General principles for design - Risk assessment and risk reduction
DIN EN ISO 13849-1/-2	Safety of machinery - Safety-related parts of control systems
DIN EN ISO 4414	Pneumatics - General rules and safety requirements for systems and their components

A complete list of the standards applied and the essential health and safety requirements is available from the manufacturer.

Michael Hemler	Rheinau, Germany, 2027-01-20	
Authorized representative for compiling the relevant technical documents	(Place and date of issuance)	Martin Zimmer (Legally binding signature) Managing Partner